WM® SYSTEM

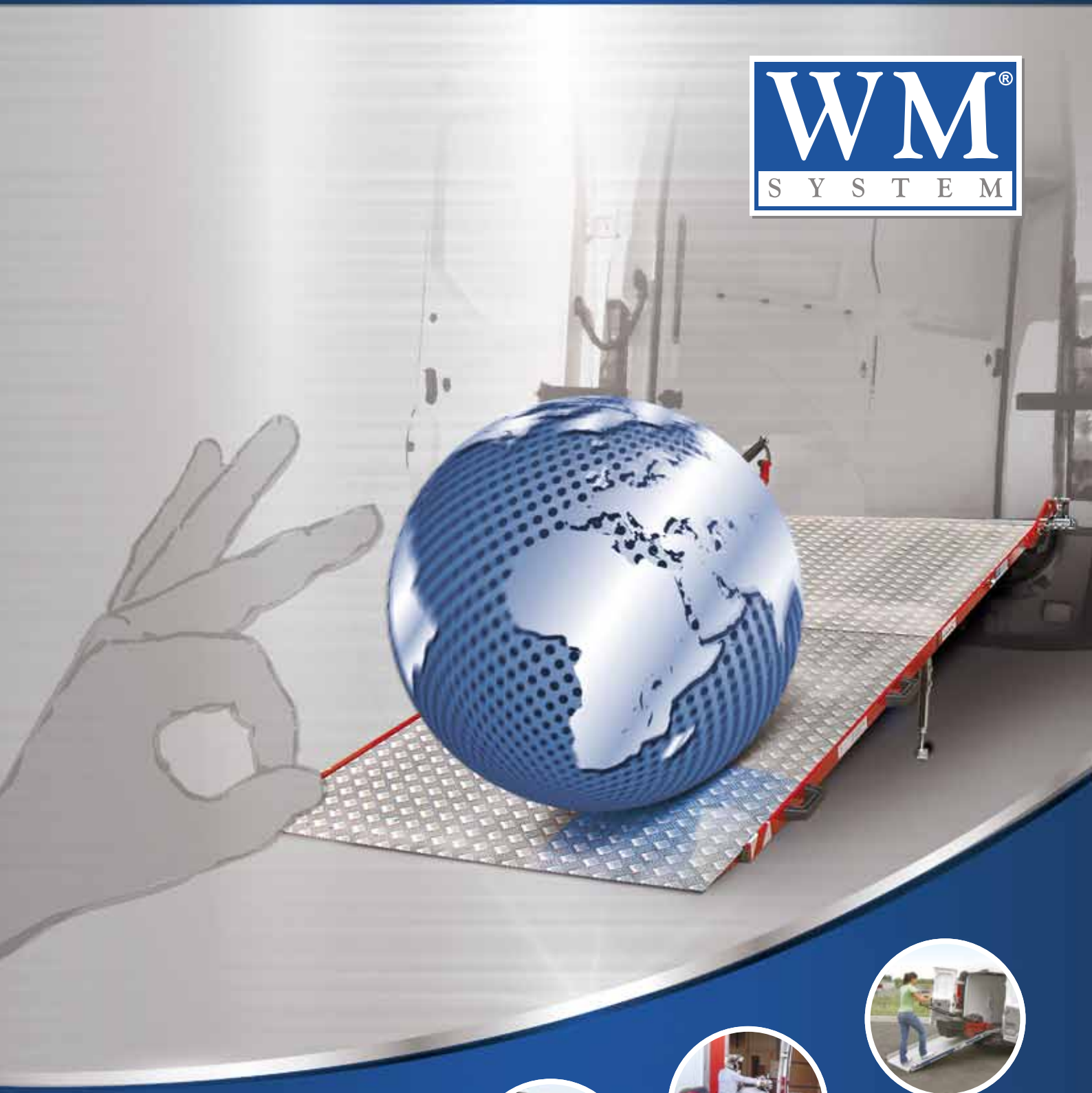

A world of solutions

OUR PRODUCTS

LOADING RAMPS

- ME 5
- PC 6
- PC-R – ME-R 8
- PM – PE 8
- WM LIGHT PLUS 9
- WM LIGHT 10
- SUPERLIGHT 12
- WM EASY 13
- WM MOBILE 14
- WM TELESCOPIC 15

- PC - ME technical data 18
- WM LIGHT PLUS technical data 18
- WM LIGHT technical data 19
- SUPERLIGHT technical data 20
- WM EASY technical data 20
- WM MOBILE technical data 21
- WM TELESCOPIC technical data 21

ACCESSORY KITS 23

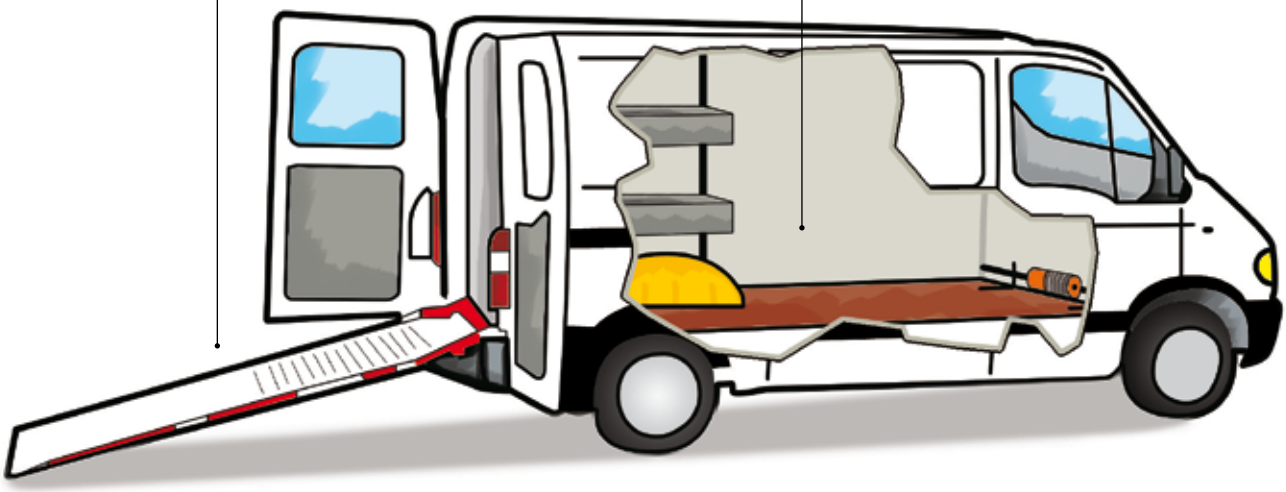

FLEXIBILITY AND RELIABILITY

WM System is an LTD, based in Reggio Emilia, Italy, which began manufacturing loading ramps for commercial vehicles in 1991. Thanks to the flexibility of our products and our experienced technicians, we are now able to offer a complete range of manual loading ramps, making your commercial vehicle as practical as possible.
Ramps can be customised in length, width and capacity upon clients specifications. This means that you can work easily and efficiently, saving time and effort.

MISSION

WM System's philosophy has always been focused on improving work conditions, consequently cost efficiency and respecting environmental conservation. We focus on supplying the best quality loading products to meet individual business needs, whilst exceeding health and safety standards.
Our motivation is simple, to supply easy, simple and safe products for quick loading into light commercial vehicles.
Visit our web site **www.wmsystem.com**

CERTIFICATION

WM System holds the TÜV NORD confirmation for the Quality Management System and our products are then tested by TÜV NORD according to international road traffic legislation.
Thanks to our own welding department and CNC machines, we can guarantee total control over every production phase achieving top-quality standards.
All WM ramps are completely made in Italy, with materials from an entirely Italian supply chain and we ensure that each production process meets the highest quality standards, making our company the stand alone leader in this specific niche market. Excellent service and flexibility are WM System's traits. Our ramps are covered by a 2 year warranty.

PATENTED SYSTEM

SERVICE AND SKILLS

WM System has a team of qualified personnel who are experts in service and advice; our experienced technical team is always on hand to offer any technical or installation support.
WM System provides detailed and easy-to-follow assembly instructions.
Our loading ramps can easily be transferred quickly from one vehicle to another. The ramps are subject to stringent quality checks and are proven to be robust with an unrivalled long lifespan.
WM System loading ramps have short delivery lead times.

ADVANTAGES

WM System loading ramps have short delivery terms.
WM System loading ramps are designed to:

- Significantly reduce time of loading and transport
- Significantly decrease operator fatigue
- Reduce operator down time; reliable manual system
- Guarantee operator safety: we believe that safety is paramount
- Improve working conditions and provide professional image.

APPLICATIONS

WM System loading ramps are versatile and offer a solution for any loading and unloading requirement. WM ramps can be used in virtually every sector where there is a load to be transported. The use of WM ramps reduces time in loading and unloading materials, reducing operating costs and efforts. We strive to create bespoke solutions according to the needs of our clients and we are able to offer customised ramps for all light commercial vehicles, along with a range of standard options. There are now more than 800 versions of ramps available and 12 different models: ME, PC, PC-R, ME-R, PM, PE, WM LIGHT PLUS, WM LIGHT, WM LIGHT-R, SUPERLIGHT, WM EASY, WM TELESCOPIC e WM MOBILE. WM loading ramps offers the perfect loading solution for several applications, especially in the transport of:

GENERAL CLEANING

AGRICULTURAL MACHINES

MOTORCYCLES

VIDEO GAMES RETAILERS

FORWARDERS

FLORIST

QUADS

VENDING MACHINES

INDUSTRIAL CLEANING

SMALL CONSTRUCTION EQUIPMENT

DRINKS RETAILERS

WHEELCHAIRS

GARDENING TOOLS

TYRE CENTRES

FOOD & CATERING SERVICES

HEALTH CARE & MEDICAL SECTOR

WM ramps allow the operator to work in totally safe conditions.
WM ramps allow one single operator to safely load and unload wheeled loads with ease.

SALE NETWORK

WM System distributes its products in Italy and all over Europe, thanks to a network of exclusive dealers.
WM System also has dealers in America, Africa, Asia and Australia.
The complete list of WM System's partners is available on www.wmsystem.com.

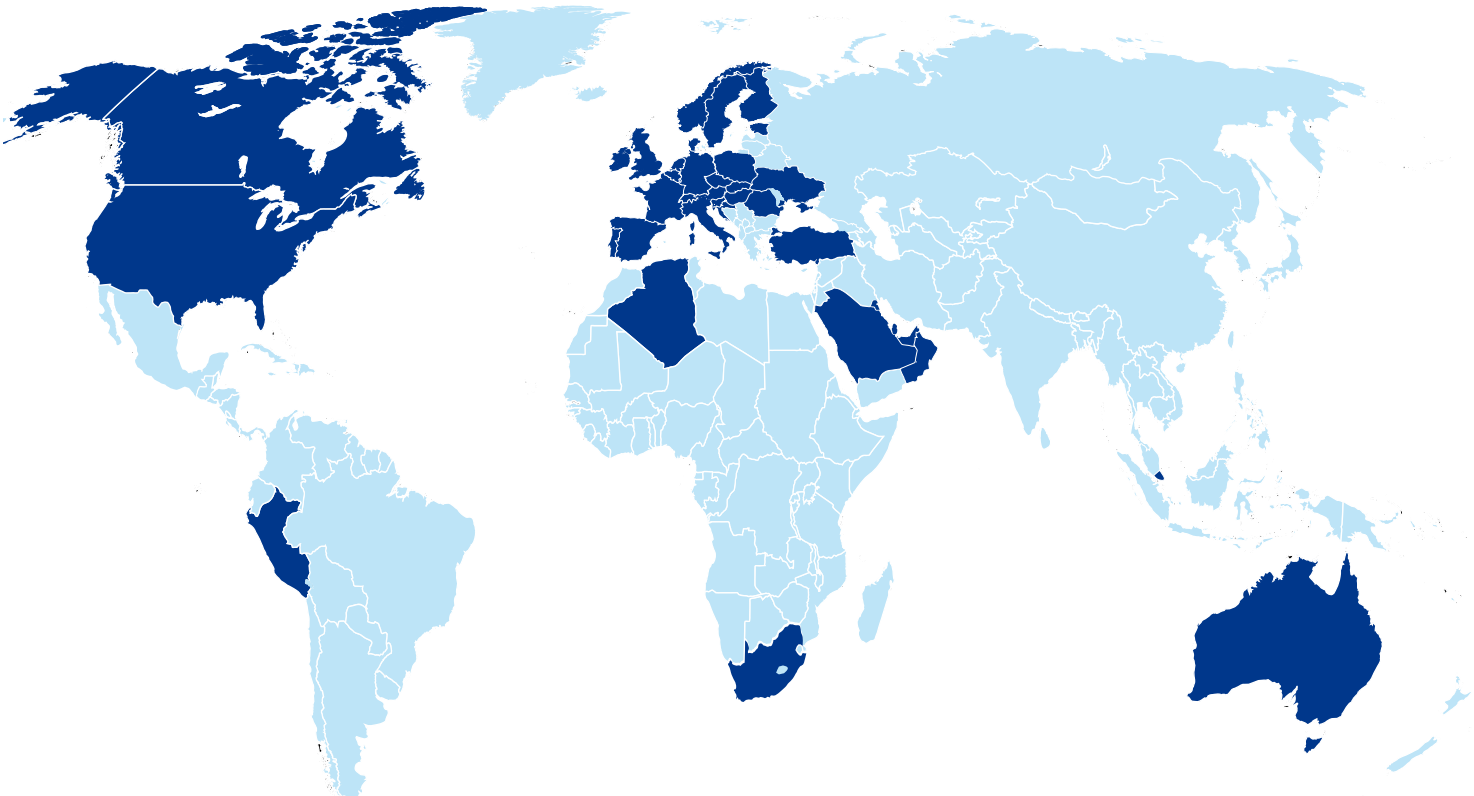

ME

The ME is a complete and practical version of WM System's loading ramps. Suitable for every loading and weight requirement, it has a simple and quick FIXED VERTICAL OPENING. The ME fixed are equipped with self-positioning feet and the larger versions are available with an additional "wheel kit" (see page 7) to make the lifting and lowering of the ramp even easier. The platform is made from shot-blasted anti-slip aluminium to give excellent grip during loading.

OPENING

CLOSED POSITION

OPEN POSITION

DIMENSIONS & LOAD CAPACITY

600 Kg
1000 Kg
1500 Kg
1800 Kg

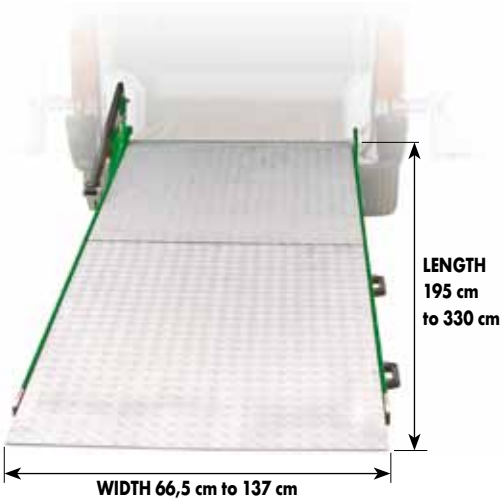

USES

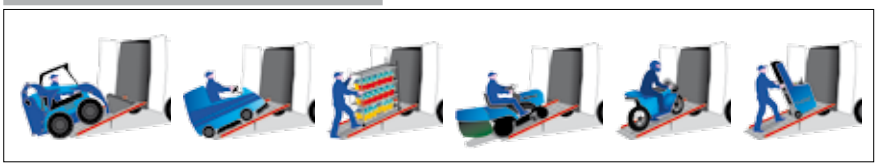

PC

The PC is the most complete and practical of WM System's loading ramps. Suitable for most loading and weight requirements, it is extremely practical thanks to the special HORIZONTAL SWIVEL OPENING. The PC Swivel is equipped with self-positioning feet and the larger versions are available with an additional "wheel kit" to make the lifting and lowering of the ramp even easier. The platform is made from shot-blasted anti-slip aluminium to give excellent grip during loading.

OPENING

CLOSED POSITION

INTERNAL SWIVEL

EXTERNAL SWIVEL

DIMENSIONS & LOAD CAPACITY

600 Kg
1000 Kg
1500 Kg
1800 Kg

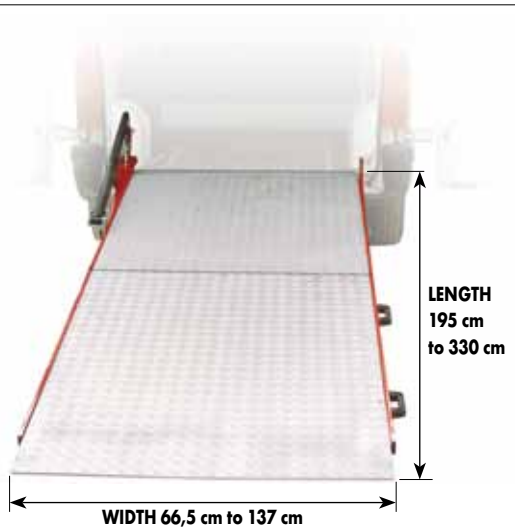

USES

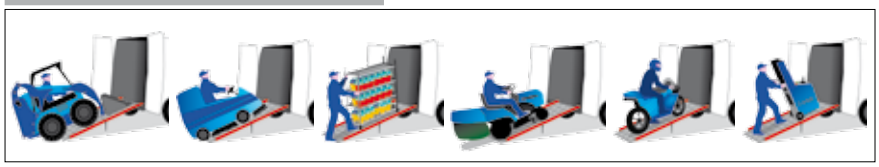

SPECIAL SOLUTIONS

RAMP FOR DOCK LOADING
450 Kg

RAMP WITH SPECIAL FEET

RAMP WITH SIDE SUPPORT
AND DOUBLE HUB

REMOVABLE EXTENSION KIT

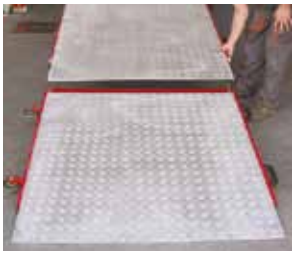

Extension suitable for all ramps to gain an improved loading angle.

MAXIMUM LOAD CAPACITY
up to 1500 Kg

LENGTH
125 cm

ADDITIONAL THIRD PIECE KIT

Factory fitted onto the ramp. Ideal for loading into low-roofed vehicles.

MAXIMUM LOAD CAPACITY
600 Kg

LENGTH
80 cm

MAXIMUM WIDTH
100 cm

WHEEL KIT

The wheel kit is made to assist the opening of larger ramps.
For models PC120x300 - ME120x300 and above.

PC-R - ME-R

The PC-R and ME-R are suitable for loading goods with large, tyred wheels. They have an expanded metal surface to allow easy cleaning and are hot-galvanised to increase their lifespan. They are available with a horizontal swivel option (PC-R) in addition to the standard vertical opening (ME-R).

DIMENSIONS & LOAD CAPACITY

OPENING

USES

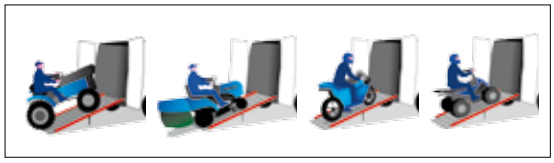

PM - PE

The PM-PE is ideal for vehicles with very low loading heights (normally air-suspension). Consisting of one single piece, it is available with a horizontal swivel option (PM) in addition to the standard vertical opening (PE). The platform is made from shot-blasted anti-slip aluminium to give excellent grip during loading.

DIMENSIONS & LOAD CAPACITY

OPENING

USES

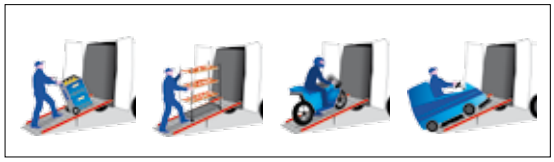

WM LIGHT PLUS

The WM Light Plus loading ramp is constructed from reinforced aluminium making it lightweight and very easy to use due to its spring assisted system. The built in swivel feature allows the ramp to pivot externally at 90 degrees giving the operator full access to the rear of the vehicle when required. The WM Light Plus is available in widths from 40 cm to 120 cm; and a range of lengths between 150 cm and 325cm. Loading capacities of 600 kg are available for ramps with widths from 40 cm to 95 cm. Ramp widths from 100 cm to 120 cm have a loading capacity of 400 Kg. An internal swivel kit is available as an option, but must be requested on order. The anti-slip surface provides a safe loading platform with raised lateral anti-fall edges increasing load safety. Movable contact flaps situated at the top and bottom of the ramp provide a smooth transition on to the ramp and in to the vehicle.

DOCK LOADING PIN

NEW SWIVEL KIT FASTER AND EASIER

EQUIPPED WITH 2 MOBILE PLATES

EQUIPPED WITH WHEELS

DIMENSIONS & LOAD CAPACITY

USES

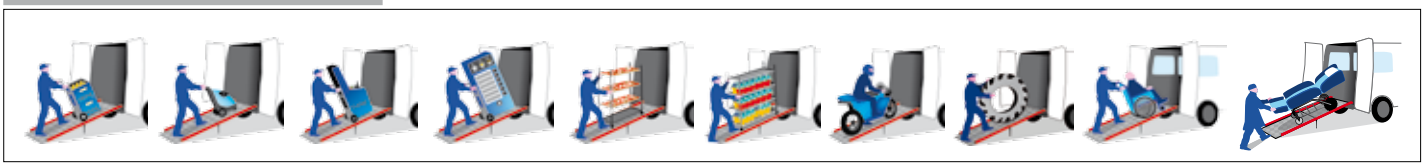

WM LIGHT

The WM LIGHT, made of aluminium, is extremely lightweight due to its spring-assisted system. Equipped with a quick connect and release system, the WM Light is easy to transfer from one vehicle to another once the simple location plates are installed. The ramp can be opened directly onto the ground without the use of feet and is available with an anti-slip aluminium surface or with mesh version.

DIMENSIONS & LOAD CAPACITY

USES

WM LIGHT VERSIONS

STANDARD:
WM Light detachable and free standing.
A procedure that can be performed within a couple of minutes.

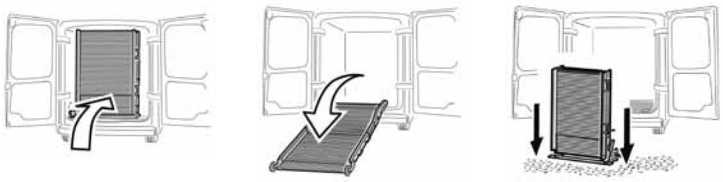

OPTIONAL:
WM Light with external rotation kit.

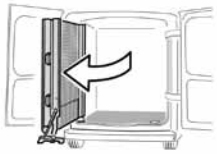

VERSIONS OF FLAP

The ramp is equipped with a flap on the bottom, that comes with a round edge as standard for dock loading. There are also two straight flap options to allow a smoother lip for smaller wheels on to the ground. These need to be specified on the order.

ROUND AND FLEXIBLE FLAP
STANDARD

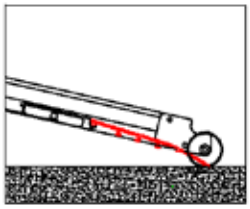

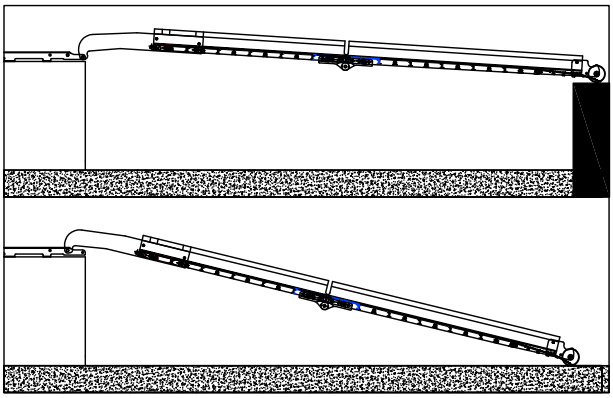

STRAIGHT AND FIXED FLAP
OPTIONAL 7AL.100

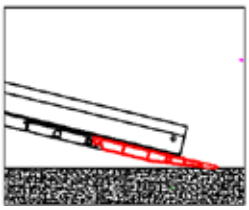

STRAIGHT AND FLEXIBLE FLAP
OPTIONAL 7AL.101

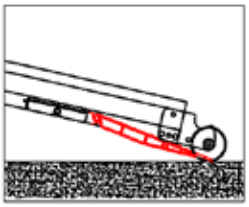

VERSIONS OF PLATFORM

A - Anti-slip aluminium

The material of the floor is anti-slip anodised aluminium, standard on the WM LIGHT. The maximum load capacity is 400 kg.

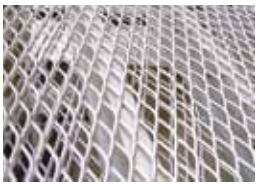

R - Aluminium expanded mesh

As an alternative you can have an aluminium expanded mesh surface, in the WM LIGHT-R version. The maximum load capacity is 300 kg and the widths available are 80 and 100 cm.

EXTENSION KIT

The extension kit is fitted directly on to the ramp, allowing the length of loading ramp to be extended, decreasing the slope.

SUPERLIGHT

The SUPERLIGHT ramp is an easy loading solution from WM System. With it's gas spring assistance, the ramp is super light weight to operate.
SUPERLIGHT is equipped with a quick-release system which allows for easy transfer between any light commercial vehicle. There is also an optional swivel rotation kit available. There are 3 standard lengths of 200cm, 225cm or 250cm and a width of 85cm. The standard capacity is 250 kg. The non-slip aluminium floor allows for safe and easy loading of all types of goods and equipment.
The vision clear option is available for those wanting to see out of their window.

DIMENSIONS & LOAD CAPACITY

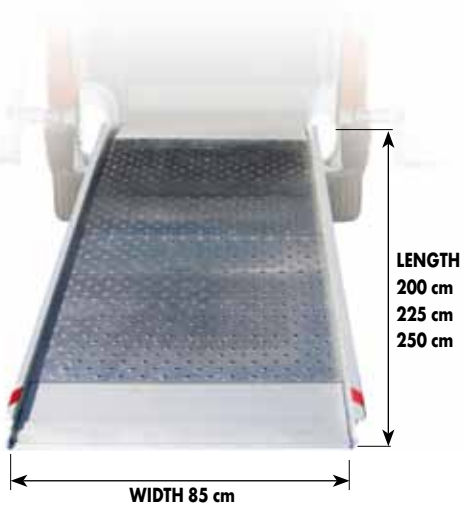

SUPERLIGHT VERSIONS

Standard: SUPERLIGHT detachable and free standing.

Optional: SUPERLIGHT with external rotation kit.

USES

VERSIONS OF FLOOR SURFACE

1-Punched aluminium floor surface

2-Punched aluminium floor with clear-view option

WM EASY

The innovative WM EASY loading ramp has been designed to meet the needs of speed, efficiency and space, in response to the evolving light commercial vehicle market.
The WM EASY series enhances the range of WM ramps, with three main innovations:

- The new movement with lateral positioning, agile and easy to use, allows the cargo area to be completely uninterrupted for normal use.
- The floor surface is anti-slip aluminum, perforated with alternating convex holes, made exclusively by WM. Thanks to this material, the ramp is extremely light and safe during loading and unloading.
- The new special hook fastening keeps the floor of the vehicle completely flush.

The yellow reflective sides, helps the ramp be visible even in low-light conditions.
The ramp is constructed in aluminum, with a loading capacity of 300 kg and it's equipped with anti-fall lateral edges on each side. This model of ramp is available in an 80cm width, with lengths between 200 and 300 cm. The WM EASY ramp can be installed on any type of commercial vehicle, thanks to its positioning/fitting at the side that minimises the overall dimensions and ensures full visibility at the back.

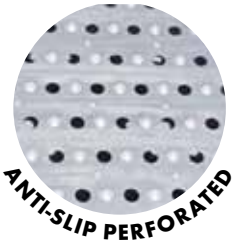

DIMENSIONS & LOAD CAPACITY

POSITIONS

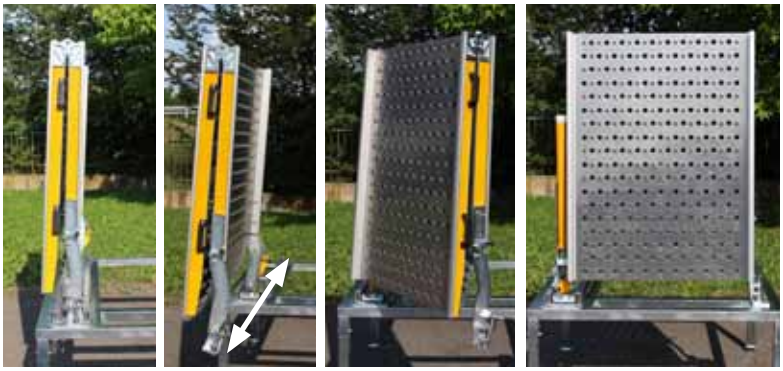

RESTING POSITION | SLIDE IN SLIDE OUT | EXTERNAL SWIVEL | CLOSING

USES

WM MOBILE

The WM MOBILE ramp, entirely made of non-slip aluminium, extends the range of WM System ramps: the main characteristic is its special support, ensuring a safe non-fixed connection on to the vehicle.
The specially designed support system is adjustable and provides 4 positions to better adapt to the different heights of the vans.
Furthermore, this special connection system makes the use of the ramp extremely safe and allows a level positioning within the loading floor.
When not in use, the WM MOBILE folds into 2 parts to be easily stowed in the van.
With 2 side handles and its simplicity, it is very easy to handle.
WM MOBILE is equipped with anti-fall lateral edges of 5 cm on both sides in green.
The sizes of the WM MOBILE ramp can be customised with widths from 30 to 100cm and lengths from 150 to 325cm. The loading capacity is 300 kg.

HANDLES

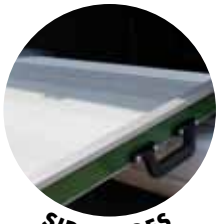
SIDE EDGES

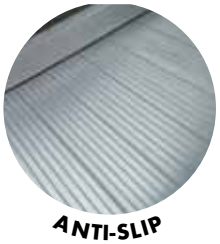
ANTI-SLIP

SUPPORT SYSTEM

DIMENSIONS & LOAD CAPACITY

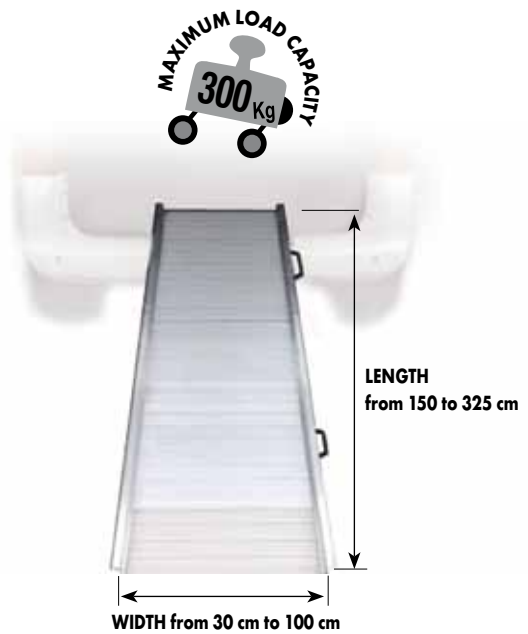

MOVEMENTS

USES

WM TELESCOPIC

This simple type of ramp, WM TELESCOPIC, is characterised by its practicality and simplicity. The pair of telescopic ramps are made from anti-slip perforated aluminium with anti-fall lateral edges, and is equipped with a side handle for easy transport. The ramps are lightweight and the support system is adjustable, offering easy use and being adaptable to any surface and altitude. The ramp is equipped with a specially designed support system, through an adjustable flap, that guarantees a safe and non-fixed connection on to the vehicle. The width of each ramp is 18,5 cm while the length is available in 5 sizes: 150, 200, 225, 250 and 300 cm. The load capacity of a pair of WM TELESCOPIC, is 300 Kg.
The locking hook allows an easy closing, once the ramp has been slid into one another.
WM TELESCOPIC takes up little space when not in use. The yellow reflective sides distinguishes this variety of ramps.

LOCKING HOOK

HANDLE AND SIDE EDGES

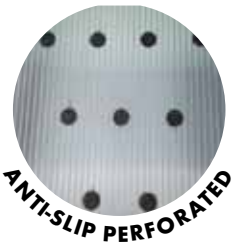

ANTI-SLIP PERFORATED

SUPPORT SYSTEM

DIMENSIONS & LOAD CAPACITY

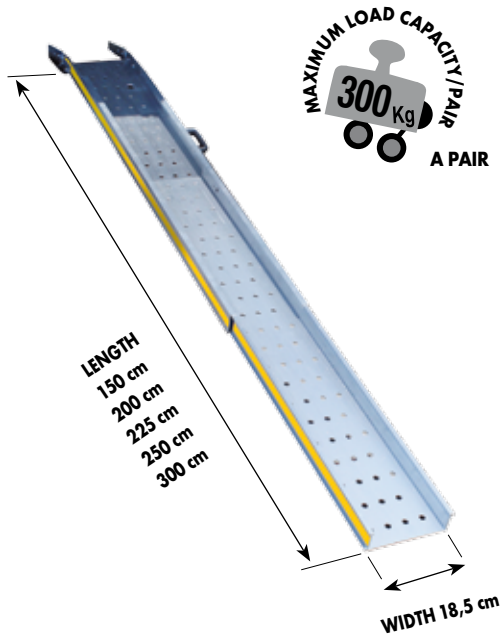

MOVEMENTS

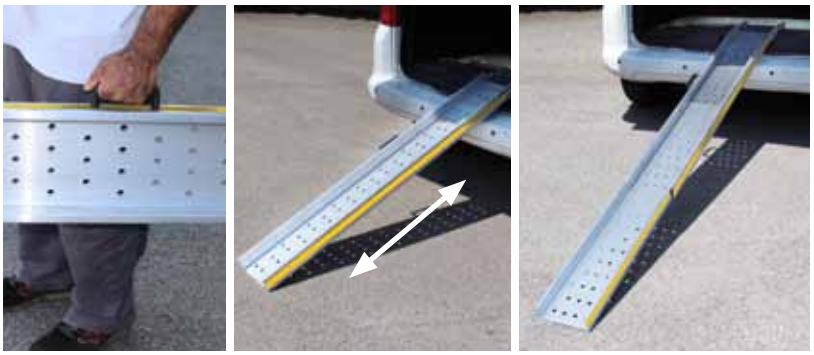

USES

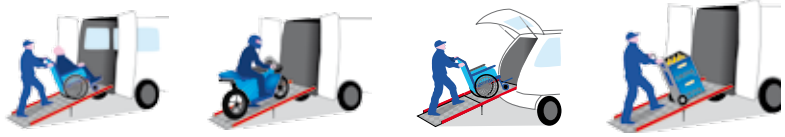

THE RAMP FOR ALL REQUIREMENTS

...GARDENING EQUIPMENTS - FLORISTS - DRINKS RETAILERS - BUILDING YARDS TILERS - SHOPKEEPERS - CLEANING COMPANIES - VENDING MACHINES DEALERS...

...AGRICULTURE - MOBILITY VEHICLES
CATERING SERVICES - FOOD SECTOR
CONSTRUCTION - QUADS - BAKERS...

PC and ME TECHNICAL DATA*

POWER REQUIRED: approx 15 Kg
SPACE REQUIRED: approx 10 cm
WARRANTY: 2 years

MAXIMUM LOAD CAPACITY from 600 to 1800 Kg

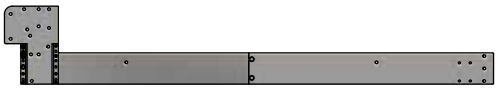

BASE

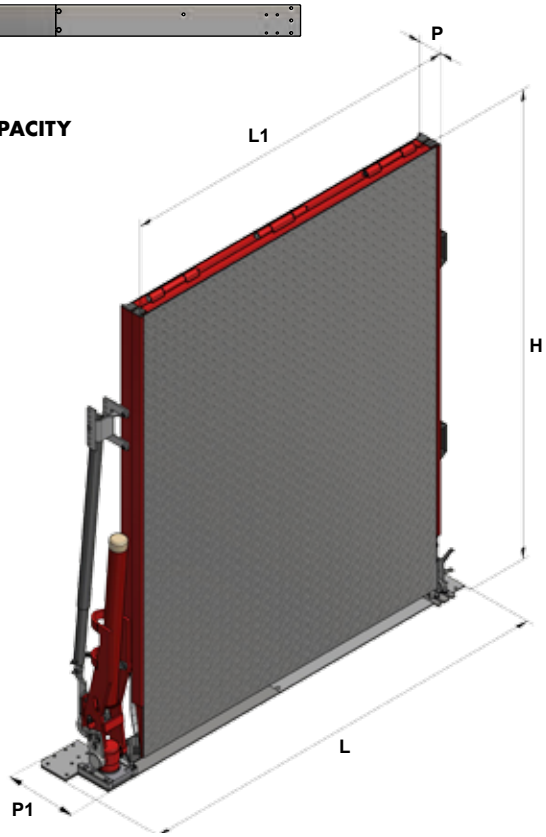

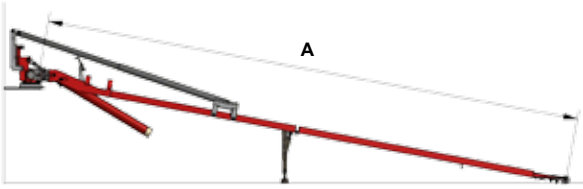

PC Mod.	ME Mod.	H (mm)	L1 (mm)	L (mm)	A (mm)	P (mm)	P1 (mm)	Load (Kg)	Weight* (Kg)
PC 90	ME 90	1175	928	1163	2100	95	250	600	77
PC 100	ME 100	1125	1028	1263	2000	95	250	600	66
PC 100	ME 100	1615	1028	1263	3000	95	250	600	101
PC100	ME100	1740	1028	1263	3250	95	250	1800	132
PC 120	ME 120	1515	1228	1463	2800	95	250	600	124
PC 120	ME 120	1615	1228	1463	3000	95	250	1500	148
PC 120	ME 120	1740	1228	1463	3250	95	250	1000	137
PC 125	ME 125	1465	1278	1513	2700	95	250	1000	126
PC 125	ME 125	1615	1278	1513	3000	95	250	1000	131
PC 125	ME 125	1615	1278	1513	3000	95	250	1500	149
PC 125	ME 125	1740	1278	1513	3250	95	250	1500	151
PC 130	ME 130	1615	1328	1563	3000	95	250	1000	136
PC 130	ME 130	1740	1328	1563	3250	95	250	1500	157
PC 135	ME 135	1615	1378	1613	3000	95	250	1000	142
PC 135	ME 135	1740	1378	1613	3250	95	250	1500	161
PC 137,5	ME 137,5	1740	1403	1638	3250	95	250	1800	184

* The technical data in the table also applies to PC-R and ME-R models
* The weight indicated does not include the fitting kit. The weight of the fitting kit depends on the van.

WM LIGHT PLUS TECHNICAL DATA

POWER REQUIRED: approx 12 Kg
SPACE REQUIRED: approx 20 cm
WARRANTY: 2 years

MAXIMUM LOAD CAPACITY from 400 to 600 Kg

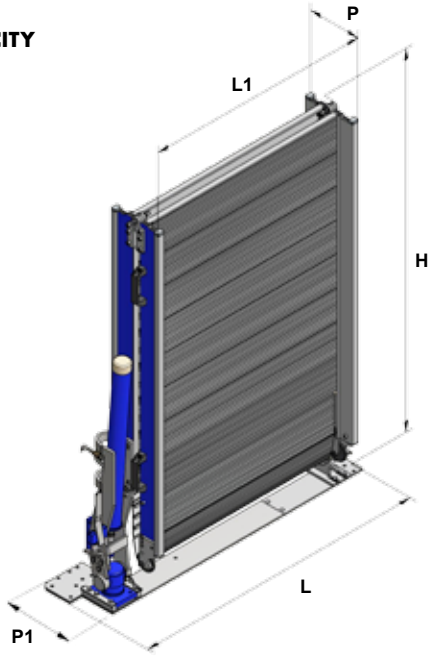

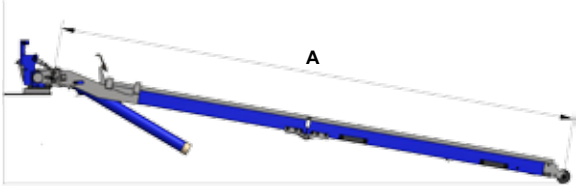

Model	L1 (mm)	L (mm)	A (mm)	H (mm)	P (mm)	P1 (mm)	Load (kg)	Weight* (Kg)
WM LIGHT PLUS 80	800	1117,5	2000	1175	203	346	600	74
WM LIGHT PLUS 80	800	1117,5	2250	1300	203	346	600	78
WM LIGHT PLUS 80	800	1117,5	2500	1425	203	346	600	82
WM LIGHT PLUS 80	800	1117,5	2750	1550	203	346	600	86
WM LIGHT PLUS 80	800	1117,5	3000	1675	203	346	600	90
WM LIGHT PLUS 80	800	1117,5	3250	1800	203	346	600	94
WM LIGHT PLUS 100	1000	1317,5	2000	1175	203	346	400	76,5
WM LIGHT PLUS 100	1000	1317,5	2250	1300	203	346	400	81
WM LIGHT PLUS 100	1000	1317,5	2500	1425	203	346	400	86
WM LIGHT PLUS 100	1000	1317,5	2750	1550	203	346	400	90,5
WM LIGHT PLUS 100	1000	1317,5	3000	1675	203	346	400	95
WM LIGHT PLUS 100	1000	1317,5	3250	1800	203	346	400	99,5
WM LIGHT PLUS 120	1200	1517,5	2500	1425	203	346	400	87
WM LIGHT PLUS 120	1200	1517,5	2750	1550	203	346	400	92
WM LIGHT PLUS 120	1200	1517,5	3000	1675	203	346	400	106
WM LIGHT PLUS 120	1200	1517,5	3250	1800	203	346	400	111

*The weight indicated does not include the fitting kit. The weight of the fitting kit depends on the van.

WM LIGHT and WM LIGHT-R TECHNICAL DATA

POWER REQUIRED: approx 10 Kg
SPACE REQUIRED: approx 21 cm
WARRANTY: 2 years

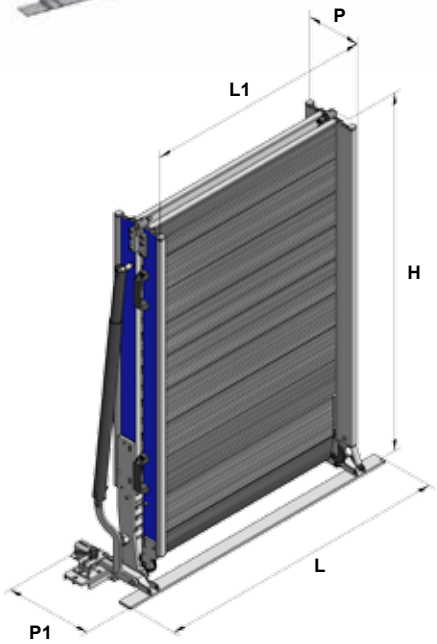

Model	A (cm)	H (mm)	L (mm)	L1 (mm)	L2 (mm)	P (mm)	P1 (mm)	Weight A* (Kg)
WM LIGHT 80	1750	960	1100	800	1160	215	345	44
WM LIGHT 80	2000	1085	1100	800	1160	215	345	48
WM LIGHT 80	2250	1210	1100	800	1160	215	345	52
WM LIGHT 80	2500	1335	1100	800	1160	215	345	56
WM LIGHT 80	2750	1460	1100	800	1160	215	345	60
WM LIGHT 80	3000	1585	1100	800	1160	215	345	64
WM LIGHT 80	3250	1705	1100	800	1160	215	345	68
WM LIGHT 100	1750	960	1300	800	1360	215	345	46
WM LIGHT 100	2000	1085	1300	1000	1360	215	345	50,5
WM LIGHT 100	2250	1210	1300	1000	1360	215	345	55
WM LIGHT 100	2500	1335	1300	1000	1360	215	345	60
WM LIGHT 100	2750	1460	1300	1000	1360	215	345	64,5
WM LIGHT 100	3000	1585	1300	1000	1360	215	345	69
WM LIGHT 100	3250	1705	1300	1000	1360	215	345	73,5

* The weight indicated does not include the fitting kit. The standard fitting kit weights 5 kg.
* The weight indicated does not include the swivel kit. The optional swivel kit, weights 6.7 Kg.

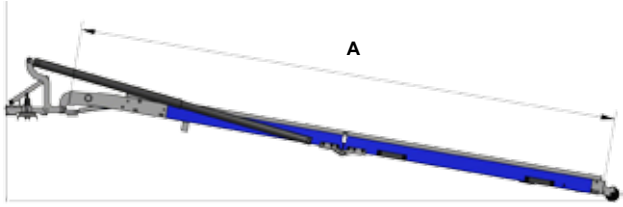

WM LIGHT

MAXIMUM LOAD CAPACITY 400 Kg

WM LIGHT-R

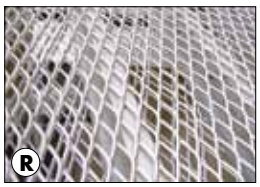

MAXIMUM LOAD CAPACITY 300 Kg

EXTENSION KIT

Extension kit of Light Serie fitted directly on the ramp

KIT for:	L1 (cm)	B (mm)	C (mm)	A (mm)	H (mm)	P (mm)	P2 (mm)	Weight (Kg)
WM LIGHT 80	800	1750	830	2580	960	215	245	24
WM LIGHT 80	800	2000	955	2955	1085	215	245	25
WM LIGHT 80	800	2250	1080	3330	1210	215	245	26
WM LIGHT 80	800	2500	1205	3705	1335	215	245	27
WM LIGHT 100	1000	1750	830	2580	960	215	245	25
WM LIGHT 100	1000	2000	955	2955	1085	215	245	26
WM LIGHT 100	1000	2250	1080	3330	1210	215	245	27
WM LIGHT 100	1000	2500	1205	3705	1335	215	245	28

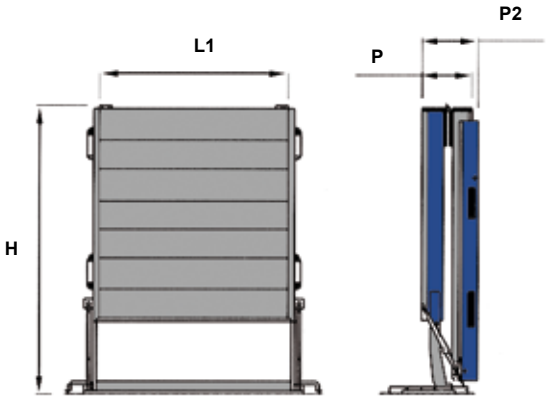

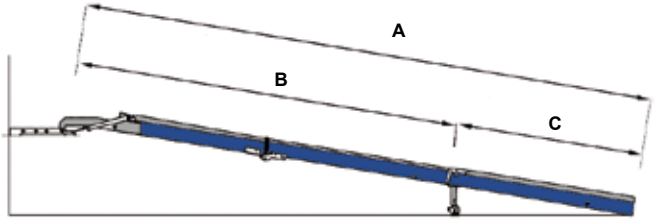

SUPERLIGHT TECHNICAL DATA

POWER REQUIRED: c.a. 9 Kg
SPACE REQUIRED: c.a. 21 cm
WARRANTY: 2 years

MAXIMUM LOAD CAPACITY 250 Kg

Code	Model	H (mm)	L (mm)	L1 (mm)	L2 (mm)	P (mm)	P1 (mm)	Load (Kg)	Weight* (Kg)
9FE212	SUPERLIGHT **85x200**	1085	1100	850	1160	215	345	250	40
9FE213	SUPERLIGHT **85x225**	1210	1100	850	1160	215	345	250	45
9FE214	SUPERLIGHT **85x250**	1335	1100	850	1160	215	345	250	50

* The weight indicated does not include the fitting kit. The standard fitting kit weights 5 kg.
* The weight indicated does not include the swivel kit. The optional swivel kit, weights 6.7 Kg.

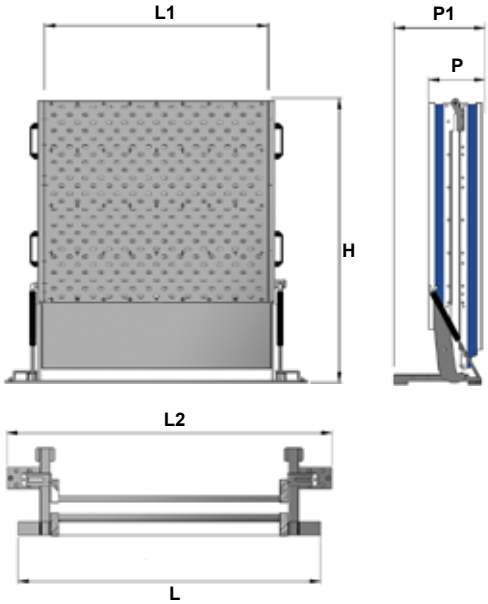

WM EASY TECHNICAL DATA

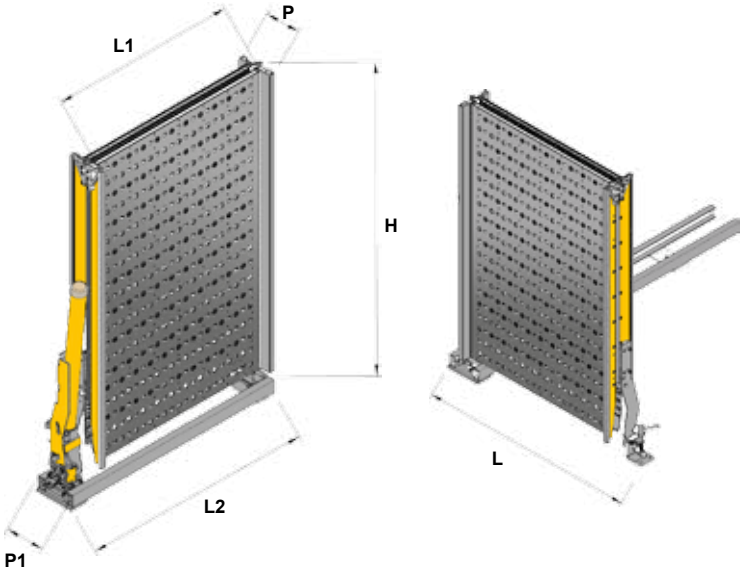

POWER REQUIRED: c.a. 8 Kg
SPACE REQUIRED: c.a. 15,5 cm
WARRANTY: 2 years

MAXIMUM LOAD CAPACITY 300 Kg

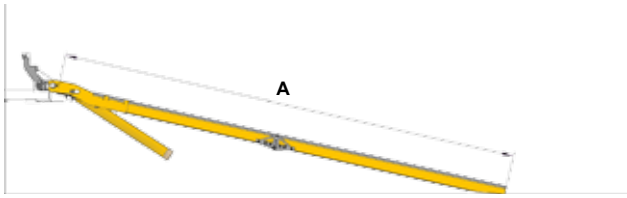

Code	Model	A (mm)	H (mm)	L (mm)	L1 (mm)	L2 (mm)	P (mm)	P1 (mm)	Load (Kg)	Weight* (Kg)
9ALE.001/DX - 9ALE.001	WM EASY cm 80 x 200	2000	1170	1030	800	1145	155	170	300	37 Kg
9ALE.002/DX - 9ALE.002	WM EASY cm 80 x 225	2250	1295	1030	800	1145	155	170	300	41 Kg
9ALE.003/DX - 9ALE.003	WM EASY cm 80 x 250	2500	1420	1030	800	1145	155	170	300	45 Kg
9ALE.007/DX - 9ALE.007	WM EASY cm 80 x 300	3000	1670	1030	800	1145	155	170	300	49 Kg

*The weight indicated does not include the fitting kit. The weight of the fitting kit depends on the van.

WM EASY SEQUENCE OF MOVEMENTS

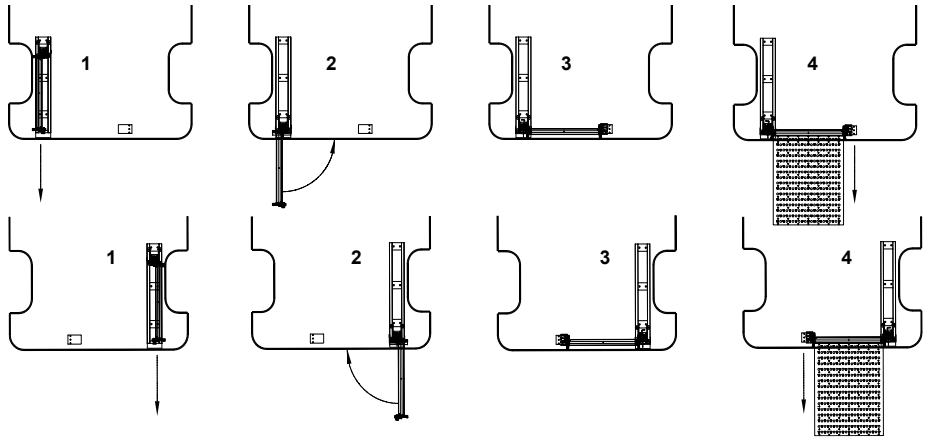

LEFT VERSION
9ALE

RIGHT VERSION
9ALE/DX

WM MOBILE TECHNICAL DATA

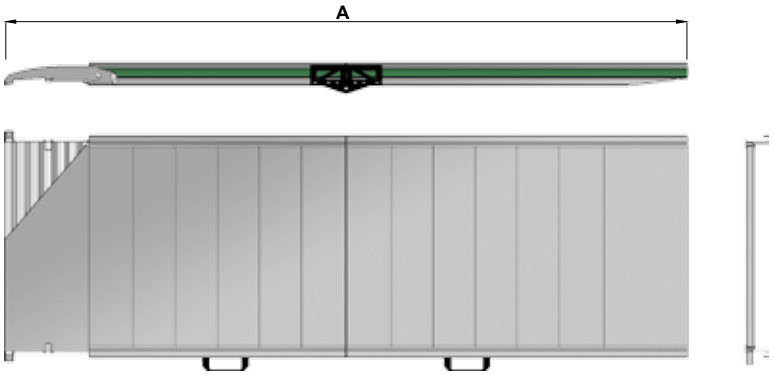

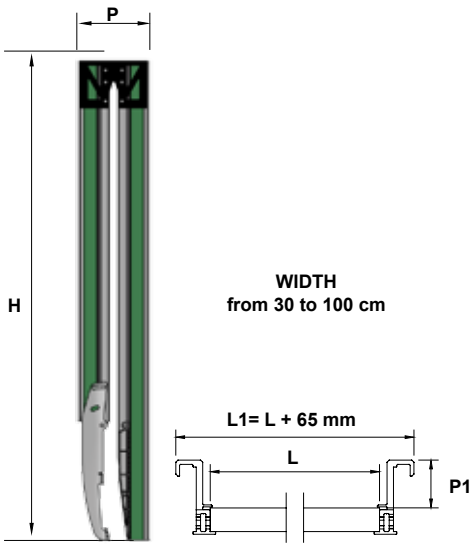

MAXIMUM LOAD CAPACITY
300 Kg

WARRANTY: 2 years

Code	Model	A (mm)	H (mm)	L (mm) ex: 600	L1 (mm)	P (mm)	P1 (mm)	Load (Kg)	Weight (Kg)
9ALD.160	WM MOBILE cm 150	1500	780	600	L+65	155	45	300	20,2
9ALD.511	WM MOBILE cm 175	1750	905	600	L+65	155	45	300	22,1
9ALD.505	WM MOBILE cm 200	2000	1030	600	L+65	155	45	300	24
9ALD.502	WM MOBILE cm 225	2250	1155	600	L+65	155	45	300	25,9
9ALD.501	WM MOBILE cm 250	2500	1280	600	L+65	155	45	300	27,8
9ALD.513	WM MOBILE cm 275	2750	1405	600	L+65	155	45	300	29,7
9ALD.519	WM MOBILE cm 300	3000	1530	600	L+65	155	45	300	31,6
9ALD.523	WM MOBILE cm 325	3250	1655	600	L+65	155	45	300	33,5

WM TELESCOPIC TECHNICAL DATA

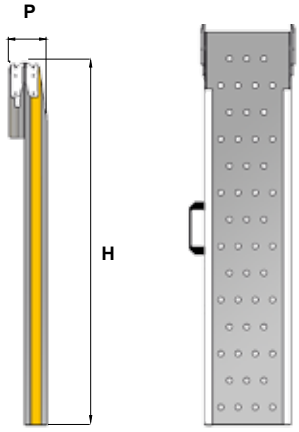

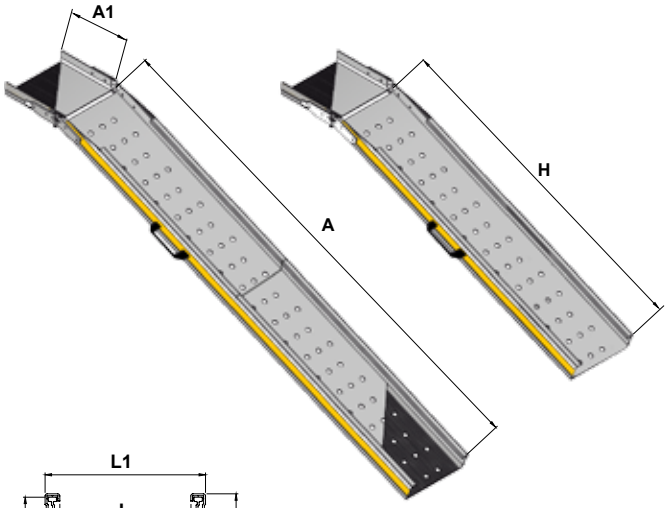

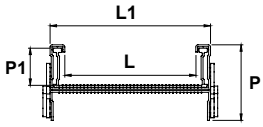

MAXIMUM LOAD CAPACITY
300 Kg A PAIR

WARRANTY: 2 years

Code	Model	A (mm)	A1 (mm)	H (mm)	L (mm)	L1 (mm)	P (mm)	P1 (mm)	Load a pair (Kg)	Weight (Kg)
9A.150	WM TELESCOPIC cm 150	1500	200	900	185	225	106	55	300	4,6
9A.200	WM TELESCOPIC cm 200	2000	200	1150	185	225	106	55	300	6,2
9A.225	WM TELESCOPIC cm 225	2250	200	1275	185	225	106	55	300	7
9A.250	WM TELESCOPIC cm 250	2500	200	1400	185	225	106	55	300	7,7
9A.300	WM TELESCOPIC cm 300	3000	200	1650	185	225	106	55	300	8,4

GUIDE TO CHOOSING RAMP

In order to supply the optimum ramp, we ask for the following information.

MAKE & MODEL OF THE VEHICLE
maximum size of the ramp, depends on the size of the doors

TYPE OF GOODS TO BE LOADED

SIZE AND MAXIMUM WEIGHT OF THE GOODS

WM System has a team of qualified staff who are experts in service and technical advice; our experienced team is always on hand to offer all the support you'll need.

RAMP SELECTION CHART

Use the chart to choose the appropriate ramp length for your vehicle.

VEHICLE FLOOR HEIGHT (CM)

RAMP LENGTH	30	40	45	50	55	60	65	70	75	80	90
200 CM.	15,1%	20,3%	23,0%	25,9%	28,7%	31,5%	34,4%	37,4%	40,4%	43,6%	50,4%
210 CM.	14,4%	19,4%	22,0%	24,5%	27,2%	29,8%	32,5%	35,4%	38,2%	41,2%	47,4%
220 CM.	13,7%	18,5%	20,9%	23,3%	25,9%	28,3%	30,8%	33,4%	36,2%	39%	44,8%
230 CM.	13,2%	17,6%	20,0%	22,2%	24,6%	27,0%	29,4%	31,9%	34,4%	37,1%	42,5%
240 CM.	12,6%	16,9%	19,0%	21,2%	23,4%	25,8%	28,1%	30,4%	32,9%	35,4%	40,5%
250 CM.	12,1%	16,2%	18,3%	20,3%	22,5%	24,7%	26,8%	29,2%	31,3%	33,8%	38,6%
260 CM.	11,5%	15,5%	17,6%	19,6%	21,6%	23,6%	25,8%	27,9%	30,2%	32,3%	36,9%
270 CM.	11,2%	14,9%	16,9%	18,9%	20,9%	22,7%	24,7%	26,8%	28,8%	31,0%	35,4%
280 CM.	10,8%	14,4%	16,4%	18,2%	20,0%	22,0%	23,8%	25,8%	27,7%	29,8%	33,9%
300 CM.	10%	13,5%	15,1%	16,9%	18,7%	20,3%	22,1%	24,0%	25,8%	27,7%	31,4%
320 CM.	9,4%	12,6%	14,2%	15,8%	17,4%	19,0%	20,7%	22,3%	24,2%	25,8%	29,3%
325 CM.	9,2%	12,4%	14,0%	15,6%	17,0%	18,7%	20,3%	22,0%	23,6%	25,4%	28,8%

- EASY FOR MOST LOAD
- AVERAGE FOR MOST LOAD
- SOMEWHAT DIFFICULT FOR LARGE LOAD
- NOT RECCOMENDED EXCEPT FOR LIGHT LOAD

The weight distribution on the ramp should be uniform.

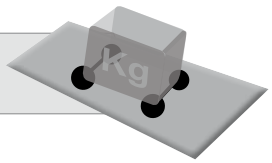

MODULAR SYSTEM

The WM System MODULAR SYSTEM is an ideal accessory kit, making the inside of your van more practical. The various custom options make this modular system a safe and practical solution.

COMPLETE LADDER RACK
COD. 9V.006

SIDE SUPPORT KIT
COD. 9V.004

STAINLESS STEEL CONTAINER 21X100 cm
(available with or without safety retainer)
COD. 9V.005

OPTIMISED SPACE!
THE CONTAINER STAYS OVER THE WHEELARCH!

WHEELARCH COVER WITH BUILT-IN STORAGE SPACE

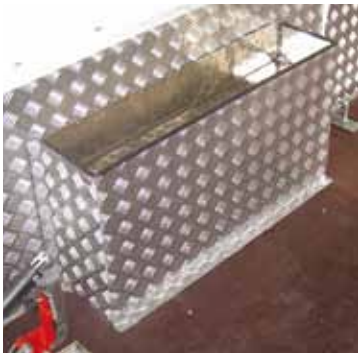

The wheelarch cover is made to measure for each vehicle

SUPPORT FOR MOVABLE WINCH

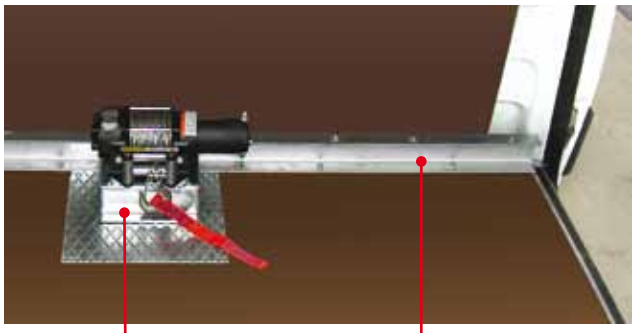

ANCHOR BRACKET FOR MOVABLE WINCH

REINFORCED RAIL with anchorage support for movable winch

Wireless remote control with winch cable
Length: 15 mt
Towing capacity: 1134 Kg
Power: 12 Volt

FLOOR ANCHORAGE SYSTEM

L-SHAPED STRENTHENING
COD. 9V.008

TUBE
lenght 200 cm
20x20
COD. 9V.009

ANCHORAGE SUPPORT
COD. 9V.007

- Secure and robust anchorage
- Versatile anchored positions

WM SYSTEM S.r.l.
Registred office: Via 2 Giugno, 5 - 42047 Rolo (RE) - ITALY
Head quarter: Via Campogrande 94/96 - 42047 Rolo (RE) - ITALY
Tel. +39 0522 66 56 64 - Fax + 39 0522 66 03 27 - info@wmsystem.com

www.wmsystem.com

AUTHORISED DEALER: