SERIE 9000

SERIE 9000 EXTENSION 6 M

9004/GS

9004

ART.	9004/GS	9004
Description	Extension with Schuko plug and socket	Extension reel
cable length	m 6 (5 + 1)	m 6 (5 + 1)
cable	3G1,5-H05VV-F	3G1,5-H05VV-F
socket, plug, incoming cable	YES (Schuko plug and socket)	NO
W (20°C)	1400	1400
W (20°C)	1900	1900
thermic protection	YES	YES
V max	500	500
	100	100
	mm 240x195x120 Kg 2,5	mm 240x195x120 Kg 2,5

DIMENSIONS

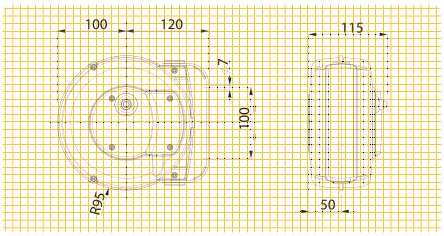

· **Technical features** see page 151
· **Caracteristiques techniques** voir page 151

SERIE AM

SERIE AM EXTENSION 15 M

ART.	AM40/315
Description	Extension reel
cable length	15 m (14 + 1)
cable	3G1,5-H05VV-F
socket, plug, incoming cable	NO
W (20°C)	1200
W (20°C)	1800
thermic protection	YES
V max	500
	44
	mm 360x310x185 Kg 5
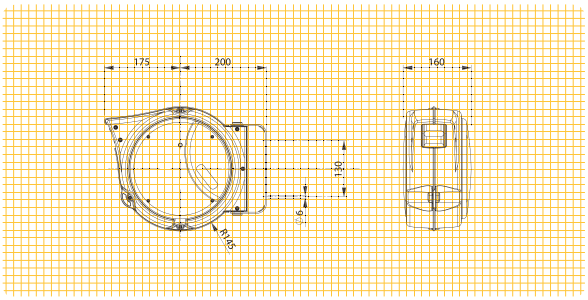
DIMENSIONS