PISTOLE DI SOFFIAGGIO E LAVAGGIO

BLOWING AND WASHING GUNS

SOUFFLETTES ET PISTOLETS DE PULVERISATION

PISTOLA SOFFIAGGIO PROFESSIONALE IN MATERIALE PA6
PROFESSIONAL BLOW GUN - PA6 MATERIAL
SOUFFLETTE PROFESSIONELLE EN MATERIEL PA6

AP/1S

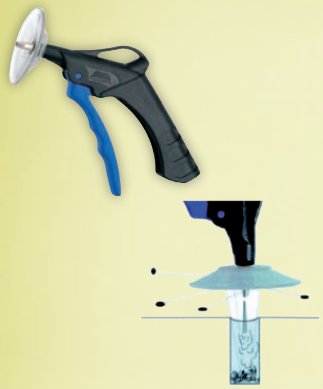

AP

AP/AR

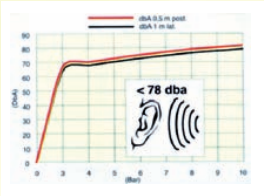

AP/V

VENTURI

AP/3G

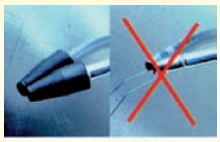

PISTOLA SOFFIAGGIO PROFESSIONALE IN MATERIALE PA6 CON LIMITATORE DI PRESSIONE
PROFESSIONAL BLOW GUN WITH PRESSURE LIMITING VALVE PA6 MATERIAL
SOUFFLETTE PROFESSIONELLE EN MATERIEL PA6 AVEC LIMITEUR DE PRESSION

APL

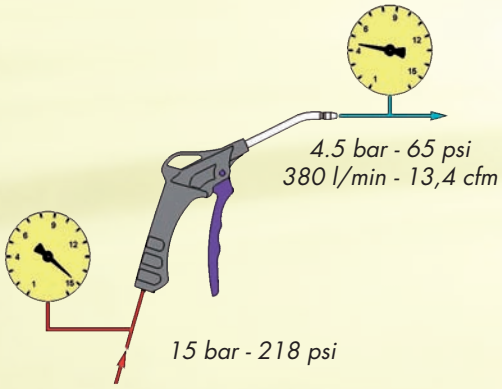

SU RICHIESTA IL MODELLO APL PUO' ESSERE FORNITO IN TUTTE LE VERSIONI
THE APL MODEL IS AVAILABLE IN ALL VERSIONS ON REQUEST
SUR DEMANDE LE LIMITEUR DE PRESSION PEUT ETRE FOURNI SUR TOUS LES MODELES DES PISTOLETS APL

CARATTERISTICHE TECNICHE
- Corpo in PA6
- Valvola ad apertura progressiva
- Inserti in ottone
- Ugelli intercambiabili
- Disegno ergonomico
- Peso AP 70 gr. - APL 140 gr.
- Resistenza allo schiacciamento 350 kg. Max
- Pressione max.: AP 10 bar - APL 15 bar

TECHNICAL CHARACTERISTICS
- *Body in PA6 material*
- *Progressive air jet*
- *Brass inserts*
- *Interchangeable nozzles*
- *Ergonomic design*
- *Weight AP 70 gr. - APL 140 gr.*
- *Compression strength max. Kg. 350*
- *Max. Pressure: AP 10 bar - APL 15 bar*

CARACTERISTIQUES TECHNIQUES
- Corps en PA6
- Jet progressif
- Insertions en laiton
- Buses interchangeables
- Dessein ergonomique
- Poids AP 70 gr. - APL 140 gr.
- Resistance à la compression 350 kg max.
- Pression max.: AP 10 bar - APL 15 bar

AP/1

PISTOLA DI SOFFIAGGIO CON UGELLO CORTO
BLOW GUN WITH SHORT NOZZLE
SOUFFLETTE BUSE COURTE

- Materiale PA6
- Valvola ad apertura progressiva
- Ugello in alluminio

- *PA6 material*
- *Progressive air jet*
- *Aluminum nozzle*

- Matériel PA6
- Jet progressif
- Buse en aluminium

Max. Pres. 10 bar CE

AP/1S

PISTOLA SOFFIAGGIO CON SCHERMO ANTISCHEGGE
BLOW GUN WITH PROTECTIVE SCREEN
SOUFFLETTE BUSE COURTE ET ECRAN DE SECURITE

- Materiale PA6
- Valvola ad apertura progressiva
- Ugello in alluminio
- Schermo in nylon

- *PA6 material*
- *Progressive air jet*
- *Aluminum nozzle*
- *Nylon protective screen*

- Matériel PA6
- Jet progressif
- Buse en aluminium
- Ecran de protection en nylon

Max. Pres. 10 bar CE

AP/1G

PISTOLA SOFFIAGGIO CON UGELLO ANTIGRAFFIO
BLOW GUN WITH ANTI SCRATCH RUBBER NOZZLE
SOUFFLETTE BUSE COURTE EN CAOUTCHOUC ANTI-RAYURE

- Materiale PA6
- Valvola ad apertura progressiva
- Ugello in alluminio ricoperto in gomma

- *PA6 material*
- *Progressive air jet*
- *Rubber coated aluminum nozzle*

- Matériel PA6
- Jet progressif
- Buse en aluminium avec revêtement en caoutchouc

Max. Pres. 10 bar CE

AP/2

PISTOLA SOFFIAGGIO A CANNA LUNGA
BLOW GUN WITH LONG NOZZLE
SOUFFLETTE BUSE LONGUE

- Materiale PA6
- Valvola ad apertura progressiva
- Tubo ottone 125 mm
- ** Disponibile anche con tubo alluminio da 500 e 1000 mm

- *PA6 material*
- *Progressive air jet*
- *Brass pipe 125 mm*
- ***Available also with 500 and 1000 mm aluminum pipe*

- Matériel PA6
- Jet progressif
- Longueur buse laiton 125 mm
- **Disponible aussi avec buse longue en aluminium de 500 et 1000 mm

Max. Pres. 10 bar CE

AP/2S

PISTOLA SOFFIAGGIO CANNA LUNGA E SCHERMO
BLOW GUN WITH LONG NOZZLE AND PROTECTIVE SCREEN
SOUFFLETTE BUSE LONGUE AVEC ECRAN DE PROTECTION

- Materiale PA6
- Valvola ad apertura progressiva
- Tubo ottone 125 mm
- Schermo in nylon

- *PA6 material*
- *Progressive air jet*
- *Brass pipe 125 mm*
- *Nylon protective screen*

- Matériel PA6
- Jet progressif
- Longueur tuyau laiton 125 mm
- Ecran de protection en nylon

Max. Pres. 10 bar CE

GRAFICO CONSUMO ARIA PISTOLE AP / *AIR CONSUMPTION GRAPH*
GRAPHIQUE CONSOMMATION D'AIR

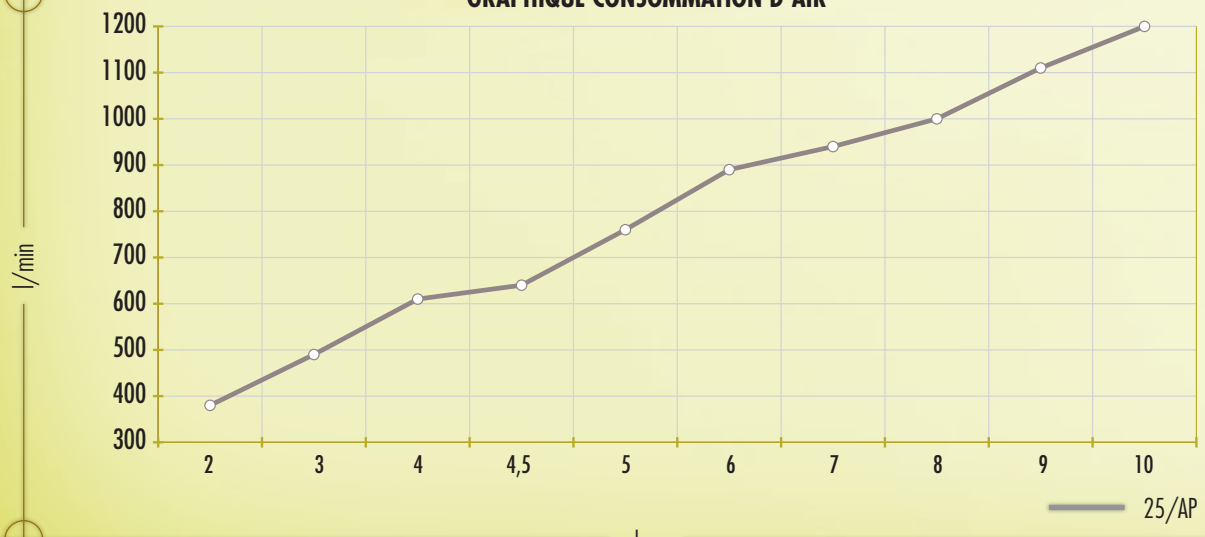

AP/3

PISTOLA SOFFIAGGIO A CANNA PIEGATA
BLOW GUN WITH LONG NOZZLE
SOUFFLETTE BUSE LONGUE

- Materiale PA6
- Valvola ad apertura progressiva
- Tubo ottone 100 mm

- *PA6 material*
- *Progressive air jet*
- *Brass pipe 100 mm*

- Matériel PA6
- Jet progressif
- Buse laiton 100 mm

Max. Pres. 10 bar CE

AP/3G

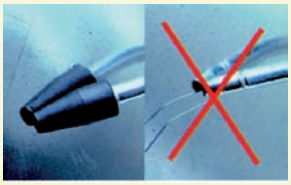

PISTOLA SOFFIAGGIO A CANNA PIEGATA CON UGELLO ANTIGRAFFIO
BLOW GUN WITH LONG PIPE AND RUBBER NOZZLE
SOUFFLETTE BUSE LONGUE EN CAOUTCHOUC ANTI-RAYURE

- Materiale PA6
- Valvola ad apertura progressiva
- Lunghezza tubo ottone 105 mm
- Con ugello in gomma antigraffio

- *PA6 material*
- *Progressive air jet*
- *Brass pipe 105 mm*
- *With anti scratch rubber nozzle*

- Matériel PA6
- Jet progressif
- Longueur tuyau laiton 105 mm
- Avec buse anti-rayure en caoutchouc

Max. Pres. 10 bar CE

AP/3 AR

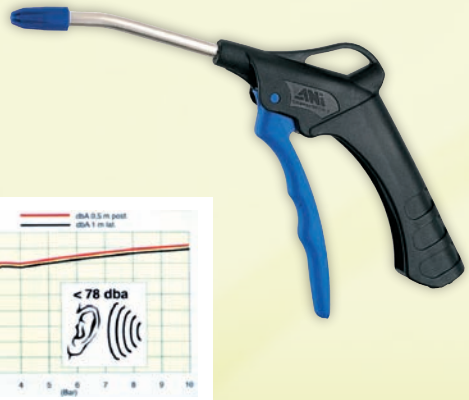

PISTOLA SOFFIAGGIO A CANNA PIEGATA CON UGELLO ANTI RUMORE
BLOW GUN WITH SOUND DEADENING NOZZLE
SOUFFLETTE BUSE LONGUE SILENCIEUSE

- Materiale PA6
- Valvola ad apertura progressiva
- Rumorosità massima 85 db
- Lunghezza tubo ottone 105 mm

- *PA6 material*
- *Progressive air jet*
- *Maximum noise level 85 db*
- *Brass pipe 105 mm*

- Matériel PA6
- Jet progressif
- Niveau de bruit max. 85 db
- Longueur tuyau laiton 105 mm

Max. Pres. 10 bar CE

AP/AR

PISTOLA SOFFIAGGIO UGELLO ANTI RUMORE
BLOW GUN WITH SOUND DEADENING NOZZLE
SOUFFLETTE BUSE COURTE SILENCIEUSE

- Materiale PA6
- Valvola ad apertura progressiva
- Rumorosità massima 85 db

- *PA6 material*
- *Progressive air jet*
- *Maximum noise level 85 db*

- Matériel PA6
- Jet progressif
- Niveau de bruit max. 85 db

Max. Pres. 10 bar CE

AP/AN

PISTOLA SOFFIAGGIO ANTI INFORTUNISTICA
BLOW GUN WITH SHORT SAFETY NOZZLE
SOUFFLETTE AVEC BUSE DE SECURITE

- Materiale PA6
- Valvola ad apertura progressiva
- Con ugello con schermo ad aria

- *PA6 material*
- *Progressive air jet*
- *With air screen safety nozzle*

- Matériel PA6
- Jet progressif
- Avec buse de sécurité à écran d'air

Max. Pres. 10 bar CE

AP/V

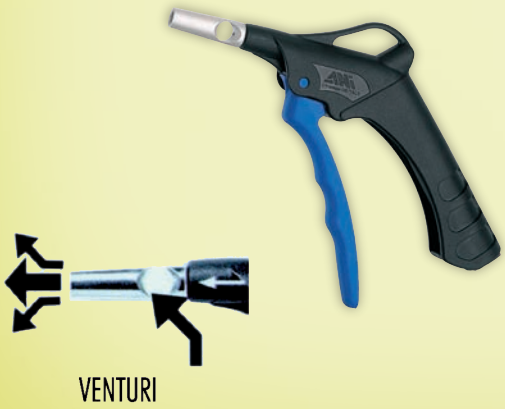

PISTOLA SOFFIAGGIO UGELLO VENTURI
BLOW GUN WITH VENTURI NOZZLE
SOUFFLETTE AVEC BUSE VENTURI

- Materiale PA6
- Valvola ad apertura progressiva
- Ugello Venturi in alluminio

- *PA6 material*
- *Progressive air jet*
- *Aluminum Venturi nozzle*

- Matériel PA6
- Jet progressif
- Buse Venturi en aluminium

Max. Pres. 10 bar CE

AP/BOX

ESPOSITORE PISTOLE AP
AP DISPLAY BOX
PRESENTOIR SOUFFLETTES AP

- Contenuto:
  AP3/G 2pcs
  AP3/AR 2pcs.
  AP3 6pcs.
  AP1/G 2pcs
  AP/AR 2pcs.
  AP1 6pcs.
- *Content:*
  AP3/G 2pcs
  AP3/AR 2pcs.
  AP3 6pcs.
  AP1/G 2pcs
  AP/AR 2pcs.
  AP1 6pcs.
- Contenu:
  AP3/G 2pcs
  AP3/AR 2pcs.
  AP3 6pcs.
  AP1/G 2pcs
  AP/AR 2pcs.
  AP1 6pcs.

S

SCHERMO ANTISCHEGGE PER MOD. AP E 25/A2
DUST PROTECTION SCREEN FOR AP AND 25/A2 MODELS
ECRAN DE PROTECTION ANTI POUSSIERE POUR MOD. AP ET 25/A2

G

UGELLO ANTIGRAFFIO PER MOD. AP E 25/A2
ANTI SCRATCH RUBBER NOZZLE FOR AP AND 25/A2 MODELS
BUSE ANTI-RAYURE EN CAOUTCHOUC POUR MOD. AP ET 25/A2

AR

UGELLO SILENZIATO PER MOD. AP E 25/A2
SOUND DEADENING NOZZLE FOR AP AND 25/A2 MODELS
BUSE SILENCIEUSE POUR MOD. AP ET 25/A2

PISTOLE SOFFIAGGIO IN ALLUMINIO
ALUMINUM PROFESSIONAL BLOW GUNS
SOUFFLETTES PROFESSIONELLES EN ALUMINIUM

25/AN

25/B1-RB

25/AR

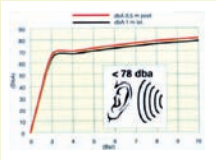

25/B2

25/A2

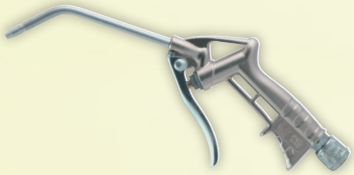

GRAFICO CONSUMO ARIA/ *AIR CONSUMPTION GRAPH*
GRAPHIQUE CONSOMMATION D'AIR

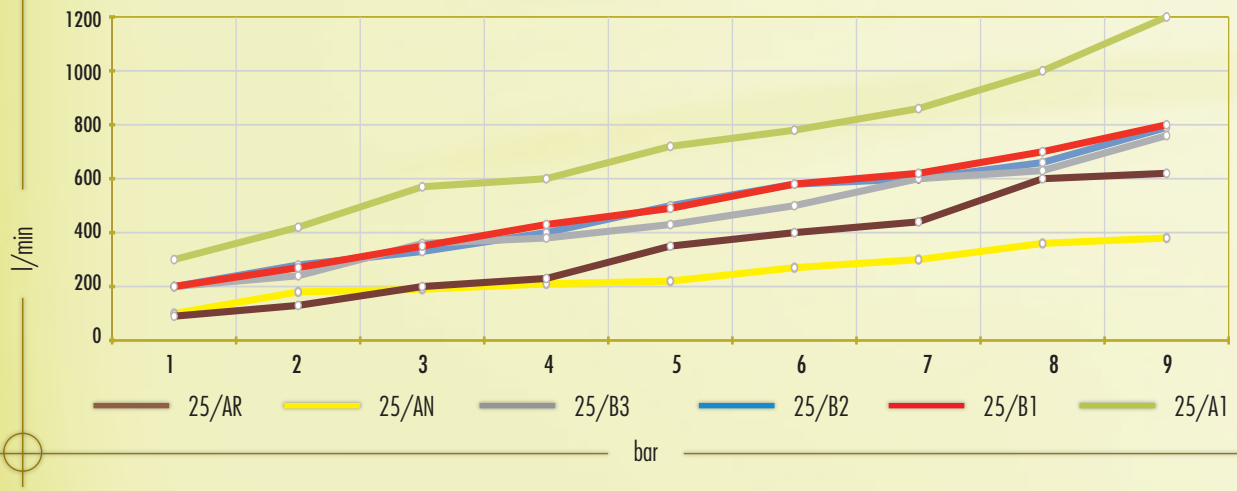

CARATTERISTICHE TECNICHE
- Corpo in alluminio nichelato
- Valvola ad apertura progressiva
- Filetto 1/4 BSP
- Disponibili con vari ugelli
- Peso 25/B1 198 g
- Pressione max. 10 Bar

TECHNICAL CHARACTERISTICS
- *Aluminum nickel-plated body*
- *Progressive air jet*
- *1/4 BSP thread*
- *Available with different types of nozzles*
- *25/B1: weight 198 g*
- *Max. Pressure 10 bar*

CARACTERISTIQUES TECHNIQUES
- Corps en aluminium nickelé
- Jet progressif
- Filet 1/4 BSP
- Disponibles avec buses différentes
- Poids 25/B1: 198 g
- Pression max. 10 Bar

25/B1-RB

PISTOLA SOFFIAGGIO RICOPERTA DI GOMMA ANTISCIVOLO
SHORT NOZZLE BLOW GUN WITH NON SLIP RUBBER COVERED GRIP
SOUFFLETTE BUSE COURTE AVEC PROTECTION EN CAOUTCHOUC ANTIGLISSE

- Corpo in alluminio nichelato
- Valvola aria progressiva
- Ricoperta di gomma antiscivolo

- *Nickel-plated aluminum body*
- *Progressive air jet*
- *Non slip rubber covered grip*

- Corps en aluminium nickelé
- Jet progressif
- Protection en caoutchouc antiglisse

Max. Pres. 10 bar CE

25/B2-RB

PISTOLA SOFFIAGGIO CANNA LUNGA RICOPERTA DI GOMMA ANTISCIVOLO
BLOW GUN WITH LONG NOZZLE AND NON SLIP RUBBER COVERED GRIP
SOUFFLETTE BUSE LONGUE AVEC PROTECTION EN CAOUTCHOUC ANTIGLISSE

- Corpo in alluminio nichelato
- Valvola aria progressiva
- Ricoperta di gomma antiscivolo

- *Nickel-plated aluminum body*
- *Progressive air jet*
- *Non slip rubber covered grip*

- Corps en aluminium nickelé
- Jet progressif
- Protection en caoutchouc antiglisse

Max. Pres. 10 bar CE

25/B1

PISTOLA SOFFIAGGIO
SHORT NOZZLE BLOW GUN
SOUFFLETTE BUSE COURTE

- Corpo in alluminio nichelato
- Valvola aria progressiva

- *Nickel-plated aluminum body*
- *Progressive air jet*

- Corps en aluminium nickelé
- Jet progressif

Max. Pres. 10 bar CE

25/AN

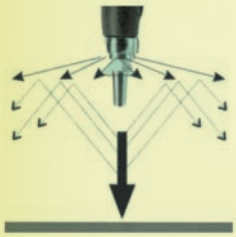

PISTOLA SOFFIAGGIO ANTI INFORTUNISTICA
BLOW GUN WITH SAFETY NOZZLE
SOUFFLETTE AVEC BUSE DE SECURITE

- Corpo in alluminio nichelato
- Valvola aria progressiva
- Ugello con schermo ad aria

- *Nickel- plated aluminum body*
- *Progressive air jet*
- *With air screen safety nozzle*

- Corps en aluminium nickelé
- Jet progressif
- Buse de sécurité à écran d'air

Max. Pres. 10 bar CE

25/AR

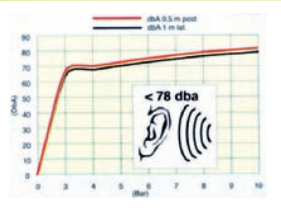

PISTOLA SOFFIAGGIO UGELLO ANTIRUMORE
BLOW GUN WITH SOUND DEADENING NOZZLE
SOUFFLETTE AVEC BUSE SILENCIEUSE

- Corpo in alluminio nichelato
- Valvola aria progressiva
- Ugello speciale antirumore
- Rumorosità massima 80 db

- *Nickel-plated aluminum body*
- *Progressive air jet*
- *Sound deadening nozzle*
- *Maximum noise level 80 db*

- Corps en aluminium nickelé
- Jet progressif
- Buse silencieuse
- Niveau sonore max. 80 db

Max. Pres. 10 bar CE

25/B2

PISTOLA SOFFIAGGIO CANNA LUNGA
BLOW GUN WITH LONG NOZZLE
SOUFFLETTE BUSE LONGUE

- Corpo in alluminio nichelato
- Valvola aria progressiva
- Lunghezza beccuccio 200 mm

- *Nickel-plated aluminum body*
- *Progressive air jet*
- *200 mm nozzle*

- Corps en aluminium nickelé
- Jet progressif
- Buse longue 200 mm

Max. Pres. 10 bar CE

25/B2 ALFA

PISTOLA SOFFIAGGIO CANNA FLESSIBILE
BLOW GUN WITH LONG FLEXIBLE NOZZLE
SOUFFLETTE BUSE LONGUE FLEXIBLE

- Corpo in alluminio nichelato
- Valvola aria progressiva
- Lunghezza beccuccio 200 mm
- Canna flessibile

- *Nickel-plated aluminum body*
- *Progressive air jet*
- *200 mm flexible nozzle*

- Corps en aluminium nickelé
- Jet progressif
- Buse longue flexible 200 mm

Max. Pres. 10 bar CE

25/A2

PISTOLA SOFFIAGGIO CANNA PIEGATA
BLOW GUN WITH CURVED NOZZLE
SOUFFLETTE AVEC BUSE COURBE

- Corpo in alluminio nichelato
- Valvola aria progressiva
- Lunghezza beccuccio 110 mm

- *Nickel-plated aluminum body*
- *Progressive air jet*
- *110 mm nozzle*

- Corps en aluminium nickelé
- Jet progressif
- Buse longue 110 mm

Max. Pres. 10 bar CE

25/B3

PISTOLA SOFFIAGGIO BECCUCCIO GOMMA
BLOW GUN WITH RUBBER NOZZLE
SOUFFLETTE AVEC BUSE EN CAOUTCHOUC

- Gomma
- Raccordo in ottone

- *Flexible rubber body*
- *Brass connector*

- Corps en caoutchouc
- Raccord en laiton

Max. Pres. 10 bar CE

KITS

VERNICIATURA / *PAINTING* / VERNISSAGE

LAVAGGIO / *WASHING* / LAVAGE

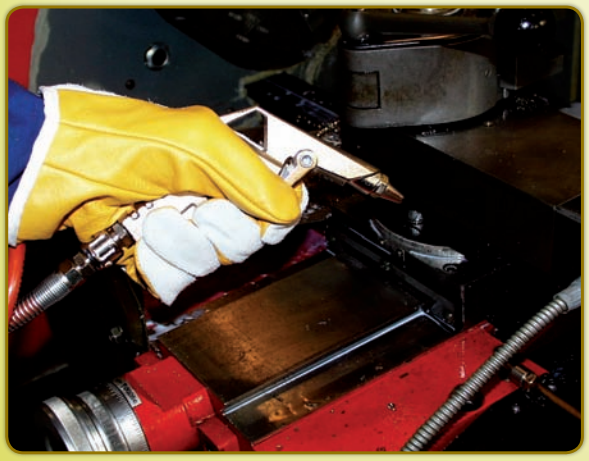

SOFFIAGGIO / *BLOWING* / SOUFFLAGE

GONFIAGGIO / *INFLATING* / GONFLAGE

KIT F1-E

Contenuto:
- Aerografo F1/E 1,5
- Pistola nafta 26/E
- Pistola gonfiaggio 25/DE (versione Cee con verifica prima)
- Pistola soffiaggio 25/B1-E
- Tubo raccordato
- 4 Raccordi

Contents:
- *F1/E 1,5 painting spray gun*
- *26/E paraffin spray gun*
- *25/D-E tyre inflating gun (with first verification in the EEC model)*
- *25/B1-E blow gun*
- *Self storing hose*
- *4 Connectors*

Contenu:
- Pistolet de peinture F1/E 1,5
- Pistolet de lavage 26/E
- Poignée de gonflage 25/D-E (avec vérification primitive dans le kit Ce)
- Soufflette 25/B1-E
- Tuyau spiralé
- 4 Raccords

KIT F1-I

Contenuto:
- Aerografo F1/I 1,5
- Pistola nafta 26/E
- Pistola gonfiaggio 25/DE (versione Cee con verifica prima)
- Pistola soffiaggio 25/B1-E
- Tubo raccordato
- 4 Raccordi

Contents:
- *F1/I 1,5 painting spray gun*
- *26/E paraffin spray gun*
- *25/D-E tyre inflating gun (with first verification in the EEC model)*
- *25/B1-E blow gun*
- *Self storing hose*
- *4 Connectors*

Contenu:
- Pistolet de peinture F1/I 1,5
- Pistolet de lavage 26/E
- Poignée de gonflage 25/D-E (avec vérification primitive dans le kit Ce)
- Soufflette 25/B1-E
- Tuyau spiralé
- 4 Raccords

KIT F1-S

Contenuto:
- Aerografo F1/S 1,5
- Pistola nafta 26/E
- Pistola gonfiaggio 25/DE (versione Cee con verifica prima)
- Pistola soffiaggio 25/B1-E
- Tubo raccordato
- 4 Raccordi

Contents:
- *F1/S 1,5 painting spray gun*
- *26/E paraffin spray gun*
- *25/D-E tyre inflating gun (with first verification in the EEC model)*
- *25/B1-E blow gun*
- *Self storing hose*
- *4 Connectors*

Contenu:
- Pistolet de peinture F1/S 1,5
- Pistolet de lavage 26/E
- Poignée de gonflage 25/D-E (avec vérification primitive dans le kit Ce)
- Soufflette 25/B1-E
- Tuyau spiralé
- 4 Raccords

KIT KB4

Contenuto:
- Aerografo F1/E 1,5
- Pistola gonfiaggio 25/D-E con manometro ø63
- Pistola soffiaggio 25/B1-E
- Tubo a spirale lungo. Mt 4
- 3 Raccordi

Contents:
- *F1/E 1,5 painting spray gun*
- *25/D-E inflating gun with 63 mm gauge*
- *25/B1-E blow gun*
- *Self storing hose 4 mt*
- *3 Connectors*

Contenu:
- Pistolet de peinture F1/E 1,5
- Poignée de gonflage 25/D-E avec manomètre diam. 63 mm
- Soufflette 25/B1-E
- Tuyau spiralé 4mt
- 3 Raccords

KIT 530

ASPIRAPOLVERE AD ARIA COMPRESSA
COMPRESSED AIR VACUUM CLEANER
ASPIRATEUR A AIR COMPRIME

- Corpo in alluminio nichelato
- Prolunga in nylon con regolatore
- 1 Bocchetta larga di aspirazione
- 1 Lancia di aspirazione
- Sacchetto filtrante con manopola di scarico
- Tubo di plastica spiralata

- *Nickel-plated aluminum body*
- *Nylon hose with suction regulator*
- *1 Large suction nozzle*
- *1 Suction pipe*
- *Filtering bag with discharging system*
- *Plastic hose*

- Corps en aluminium nickelé
- Rallonge en nylon avec régulateur d'aspiration
- 1 Bouche large d'aspiration
- 1 Lance d'aspiration
- Sachet filtrant avec poignée de vidange
- Tuyau plastique spirale

PISTOLE LAVAGGIO
PROFESSIONAL WASHING GUNS IN ALUMINUM
PISTOLETS DE PULVERISATION PROFESSIONNELS EN ALUMINIUM

26/B

26/LR

26/F

26/CR

GRAFICO CONSUMO ARIA/ *AIR CONSUMPTION GRAPH*
GRAPHIQUE CONSOMMATION D'AIR

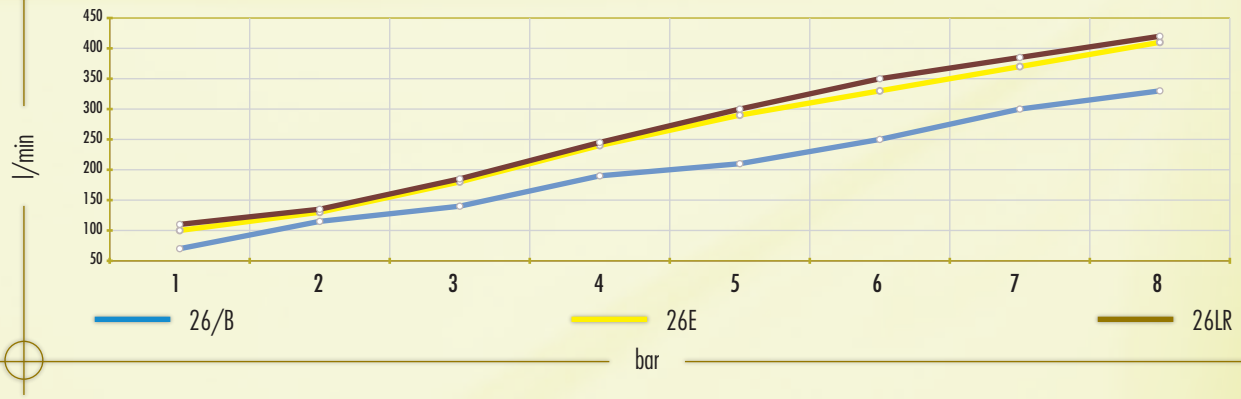

CARATTERISTICHE TECNICHE
- Corpo in alluminio nichelato
- Valvola ad apertura progressiva
- Regolatori consumo aria
- Regolatori portata liquido
- Regolazione getto
- Filetto 1/4 BSP
- Pressione aria max. 10 Bar

TECHNICAL CHARACTERISTICS
- *Aluminum nickel-plated body*
- *Progressive air jet*
- *Air flow regulators*
- *Product flow regulators*
- *Pattern regulation nozzle*
- *1/4 BSP thread*
- *Max. Air pressure 10 bar*

CARACTERISTIQUES TECHNIQUES
- Corps en aluminium nickelé
- Jet progressif
- Régulateurs débit d'air
- Régulateurs débit produit
- Réglage du jet
- Filet 1/4 BSP
- Pression d'air max. 10 Bar

26/B

PISTOLA PROFESSIONALE PER LAVAGGIO CON NAFTA CON SERBATOIO ALLUMINIO A BAIONETTA
PROFESSIONAL PARAFFIN SPRAY GUN WITH BAYONET-FIX TANK
PISTOLET PROFESSIONNEL DE PULVERISATION AVEC GODET A BAIONNETTE

- Corpo in alluminio nichelato
- Serbatoio in alluminio l. 1
- Tubo pescante in acciaio
- Ugello regolazione getto
- Regolatore consumo aria
- Tubo erogazione interno ed esterno metallico
- Valvola aria progressiva

- *Nickel-plated aluminum body*
- *1 L. Aluminum tank*
- *Steel suction pipe*
- *Fluid regulation nozzle*
- *Air regulator*
- *Inner and outer metal product delivery tube*
- *Progressive opening air valve*

- Corps en aluminium nickelé
- Godet en aluminium 1 l.
- Plongeur en acier
- Buse de réglage liquide
- Régulateur d'air
- Tuyau débit produit intérieur et extérieur en métal
- Soupape air à ouverture progressive

Max. Pres. 10 bar CE

26/B-TN

PISTOLA PER LAVAGGIO CON NAFTA CON SERBATOIO ACCIAIO FILETTATO
PARAFFIN SPRAY GUN WITH SCREW-ON TANK
PISTOLET PROFESSIONNEL DE PULVERISATION AVEC GODET FILETE

- Corpo in alluminio nichelato
- Tappo serbatoio in alluminio
- Serbatoio in acciaio l. 1
- Tubo pescante in acciaio
- Ugello regolazione getto
- Tubo erogazione esterno metallico, interno nylon
- Valvola aria progressiva
- Regolatore consumo aria

- *Nickel-plated aluminum body*
- *Aluminum lid*
- *1 L. Steel tank*
- *Steel suction pipe*
- *Fluid regulation nozzle*
- *Outer metal product delivery tube, inner tube in nylon*
- *Progressive opening air valve*
- *Air regulator*

- Corps en aluminium nickelé
- Couvercle du godet en aluminium
- Godet en acier l. 1
- Plongeur en metal
- Buse de réglage liquide
- Tuyau débit produit extérieur en metal, intérieur en nylon.
- Soupape air à ouverture progressive
- Régulateur du débit d'air

Max. Pres. 10 bar CE

26/E

PISTOLA NEBULIZZATRICE PER PRODOTTI AGGRESSIVI
SPRAY GUN FOR CORROSIVE PRODUCTS
PISTOLET DE PULVERISATION POUR PRODUITS CORROSIFS

- Corpo in alluminio nichelato
- Gruppo erogazione in nylon
- Serbatoio in nylon l. 1
- Regolazione getto
- Valvola aria progressiva

- *Nickel -plated aluminum body*
- *Nylon lid*
- *1 L. Nylon tank*
- *Nylon suction pipe*
- *Fluid regulation nozzle*
- *Inner and outer nylon product delivery tubes*
- *Progressive opening air valve*

- Corps en aluminium nickelé
- Couvercle du godet en nylon
- Godet en nylon 1 l.
- Buse de réglage liquide
- Tuyau débit produit intérieur et extérieur en nylon
- Soupape air à ouverture progressive

Max. Pres. 10 bar CE

26/LR

LANCIA LAVAGGIO ARIA-ACQUA
AIR/WATER WASHING GUN
PISTOLET DE LAVAGE AIR/EAU

- Corpo in alluminio nichelato
- Ugello regolazione getto in gomma antigraffio
- Regolatore portata liquido
- Regolatore consumo aria
- Collegamento rete idrica tramite resca ø12mm
- Valvola aria progressiva

- *Nickel-plated aluminum body*
- *Round/fan pattern regulation nozzle*
- *Air and water control regulators*
- *Connection to standard water hose - tailpiece diam. 12mm*
- *Progressive opening air valve*

- Corps en aluminium nickelé
- Buse de régulation jet rond et éventail
- Régulateurs air/eau
- Soupape air à ouverture progressive
- Raccord pour tuyau d'eau - épi diam. 12mm

Max. Pres. 10 bar CE

26/F

LANCIA LAVAGGIO PER LIQUIDI IN PRESSIONE
WASHING GUN FOR LIQUIDS UNDER PRESSURE
POIGNEE EAU POUR LIQUIDES EN PRESSION

- Corpo in alluminio nichelato
- Pomello per regolazione getto
- Funzionante con liquidi in pressione max. 20 bar

- *Nickel- plated aluminum body*
- *Adjustable spray-jet regulator*
- *To be used with pressurized products - max. 20 bar*

- Corps en aluminium nickelé
- Régulateur du jet
- A utiliser avec liquides en pression - max. 20 bar

26

PISTOLA PER EROGAZIONE ACQUA
LOW PRESSURE WATER GUN
PISTOLET A EAU BASSE PRESSION

- Corpo flessibile in gomma
- Raccordo in ottone
- Funzionante con liquidi in pressione max. 4 bar

- *Flexible rubber body*
- *Brass connector*
- *To be used with pressurized products - max. 4 bar*

- Corps en caoutchouc
- Raccord en laiton
- A utiliser avec liquides en pression - max. 4 bar

26/CR

PISTOLA EROGAZIONE LIQUIDI NON AGGRESSIVI
WASHING GUN FOR NON AGGRESSIVE LIQUIDS
PISTOLET DE LAVAGE POUR LIQUIDES NON AGGRESSIFS

- Pistola per erogazione acqua e prodotti per il lavaggio. Ideale per stazioni di servizio, autolavaggi, giardinaggio,ecc.
- Pressione di lavoro fino a 30 bar.
- Ricoperta di gomma antiscivolo con valvola progressiva.
- Tubo di erogazione aperto
- Attacco pistola 3/8" F BSP

- *Water pistol and pistol for washing detergents ideal for service stations, carwashes, gardening, etc…*
- *Working pressure up to 30 bar*
- *Non slip rubber covered body with progressive valve*
- *Open supply pipe*
- *Connector to pistol 3/8" F BSP*

- Pistolet pour eau et produits de lavage. Idéal pour stations de service, lavages-auto, jardinage, etc…
- Pression d'utilisation jusqu'à 30 bar.
- Protection en caoutchouc antiglisse avec clapet à ouverture progressive
- Tuyau de distribution ouvert
- Raccord pistolet 3/8" F BSP

26/CR-G

PISTOLA EROGAZIONE LIQUIDI NON AGGRESSIVI CON REGOLAZIONE DELLA ROSA E DEL GETTO
WASHING GUN FOR NON AGGRESSIVE LIQUIDS WITH ADJUSTABLE ROUND PATTERN AND JET
PISTOLET DE LAVAGE AVEC REGULATION JET ROND ET EVENTAIL

- Pistola per erogazione acqua e prodotti per il lavaggio. Ideale per industria, stazioni di servizio, autolavaggi, giardinaggio, ecc.
- Pressione di lavoro fino a 30 bar.
- Ricoperta di gomma antiscivolo con valvola progressiva
- Tubo di erogazione con ugello regolabile da getto a rosa nebulizzato
- Attacco pistola 3/8" F BSP

- *Water pistol and pistol for washing detergents best suited to the industry sector, service stations, carwashes, gardening, etc..*
- *Working pressure up to 30 bar*
- *Non slip rubber covered body with progressive valve*
- *Supply pipe with adjustable atomizing nozzle - rose pattern*
- *Connector to pistol 3/8" F BSP*

- Pistolet pour eau et produits de lavage. Idéal pour l'industrie, stations de service, lavages-auto, jardinage, etc…
- Pression d'utilisation jusqu'à 30 bar.
- Protection en caoutchouc antiglisse avec clapet à ouverture progressive
- Tuyau de distribution avec buse réglable jet rond et éventail
- Raccord pistolet 3/8" F BSP

26/CR-GL

PISTOLA EROGAZIONE LIQUIDI NON AGGRESSIVI CON REGOLAZIONE DELLA ROSA E DEL GETTO A CANNA LUNGA
WASHING GUN WITH LONG PIPE FOR NON AGGRESSIVE LIQUIDS WITH ADJUSTABLE ROUND PATTERN AND JET
***PISTOLET* DE LAVAGE AVEC REGULATION JET ROND ET EVENTAIL, BUSE LONGUE**

- Pistola per erogazione acqua e prodotti per il lavaggio. Ideale per industria, stazioni di servizio, autolavaggi, giardinaggio, ecc…
- Pressione di lavoro fino a 30 bar.
- Ricoperta di gomma antiscivolo con valvola progressiva
- Tubo di erogazione a canna lunga (600 mm), con ugello regolabile da getto a rosa nebulizzato
- Attacco pistola 3/8" F BSP

- *Water pistol and pistol for washing detergents best for the industry sector, service stations, carwashes, gardening, etc…*
- *Working pressure up to 30 bar*
- *Non slip rubber covered body with progressive valve*
- *Supply pipe length (600m), with adjustable atomizing nozzle - rose pattern*
- *Connector to pistol 3/8" F BSP*

- Pistolet pour eau et produits de lavage. Idéal pour l'industrie, stations de service, lavages-auto, jardinage, etc…
- Pression d'utilisation jusqu'à 30 bar.
- Protection en caoutchouc antiglisse avec clapet à ouverture progressive
- Tuyau de distribution avec buse réglable jet rond et éventail.
- Raccord pistolet 3/8" F BSP

26/CR-VL

PISTOLA EROGAZIONE LIQUIDI NON AGGRESSIVI CON GETTO A VENTAGLIO A CANNA LUNGA
WASHING GUN WITH LONG PIPE FOR NON AGGRESSIVE LIQUIDS WITH FAN PATTERN JET
PISTOLET DE LAVAGE BUSE LONGUE AVEC JET A EVENTAIL

- Pistola per erogazione acqua e prodotti per il lavaggio. Ideale per industria, stazioni di servizio, autolavaggi, giardinaggio, ecc.
- Pressione di lavoro fino a 30 bar.
- Ricoperta di gomma antiscivolo con valvola progressiva
- Tubo di erogazione a canna lunga (600 mm), con ugello a ventaglio nebulizzato
- Attacco pistola 3/8" F BSP

- *Water pistol and pistol for washing detergents aimed towards the industry sector, service stations, carwashes, gardening, etc…*
- *Working pressure up to 30 bar*
- *Non slip rubber covered body with progressive valve*
- *Supply pipe length (600m), with atomizing nozzle - fan spray pattern*
- *Connector to pistol 3/8" F BSP*

- Pistolet pour eau et produits de lavage. Idéal pour l'industrie, stations de service, lavages-auto, jardinage, etc…
- Pression d'utilisation jusqu'à 30 bar.
- Protection en caoutchouc antiglisse avec clapet à ouverture progressive
- Tuyau de distribution longue (600 mm), avec jet à éventail.
- Raccord pistolet 3/8" F BSP

Confezione/Packing/Emballage	Mod.		Ref.		
Blister / Blister / Blister	AP/1	11/A	AH051115	5	112
Scatola multipla / Multiple box / Boîte multiple		11/A	AH051137	40	112
Blister/Blister/Blister		1/4F	AH051118	5	79
Scatola multipla / Multiple box / Boîte multiple		1/4F	AH051122	40	79

Confezione/Packing/Emballage	Mod.		Ref.		
Blister / Blister / Blister	AP/1S	11/A	AH051515	5	123
		1/4F	AH051518	5	90

Confezione/Packing/Emballage	Mod.		Ref.		
Blister / Blister / Blister	AP/1G	11/A	AH051915	5	114
		1/4F	AH051918	5	1

Confezione/Packing/Emballage	Mod.		Ref.		
Sacchetto nylon/Nylon bag/Sachet en Nylon	AP/2 125	11/A	AH051208	5	118
		1/4 F	AH051211	5	85
	AP/2 500	11/A	AH051241	5	126
		1/4 F	AH051242	5	93
	AP/2 1000	11/A	AH051240	5	168
		1/4 F	AH051243	5	135

Confezione/Packing/Emballage	Mod.		Ref.		
Sacchetto nylon/Nylon bag/Sachet en Nylon	AP/2S	11/A	AH051408	5	131
		1/4F	AH051411	5	98

Confezione/Packing/Emballage	Mod.		Ref.		
Blister/Blister/Blister	AP/3	11/A	AH051315	5	114
Scatola multipla/Multiple box/Boîte multiple		11/A	AH051335	40	114
Blister/Blister/Blister		1/4 F	AH051318	5	81
Scatola multipla/Multiple box/Boîte multiple		1/4 F	AH051322	40	81

Confezione/Packing/Emballage	Mod.		Ref.		
Blister/Blister/Blister	AP/3G	11/A	AH052015	5	116
		1/4 F	AH052018	5	83

Confezione/Packing/Emballage	Mod.		Ref.		
Blister/Blister/Blister	AP/3 AR	11/A	AH052115	5	113
		1/4 F	AH052118	5	80

Confezione/Packing/Emballage	Mod.		Ref.		
Blister/Blister/Blister	AP/AR	11/A	AH051615	5	136
		1/4 F	AH051618	5	103

Confezione/Packing/Emballage	Mod.		Ref.		
Blister/Blister/Blister	AP/AN	11/A	AH051815	5	111
		1/4 F	AH051818	5	78

Confezione/Packing/Emballage	Mod.		Ref.		
Blister/Blister/Blister	AP/AV	11/A	AH051715	5	113
		1/4 F	AH051718	5	80

Confezione/Packing/Emballage	Mod.		Ref.		
Scatola/Box/Boîte	AP/BOX	1/4 F	AH121005	1	1660

Confezione/Packing/Emballage	Mod.		Ref.		
Sacchetto Nylon/Nylon bag/Sachet Nylon	S	-----	BE058150	1	13

Confezione/Packing/Emballage	Mod.		Ref.		
Sacchetto Nylon/Nylon bag/Sachet Nylon	G	-----	BE058140	1	2

Confezione/Packing/Emballage	Mod.		Ref.		
Sacchetto Nylon/Nylon bag/Sachet Nylon	AR	-----	BE058120	1	2

Confezione/Packing/Emballage	Mod.		Ref.		
Scatola/Box/Boîte	25/B1-RB	11/A	AH052801	1	198
Scatola multipla/Multiple box/Boîte multiple		11/A	AH052804	40	198
Scatola multipla/Multiple box/Boîte multiple		1/4 F	AH052802	40	157

Confezione/Packing/Emballage	Mod.		Ref.		
Scatola/Box/Boîte	25/B2-RB	11/A	AH052901	1	210
Scatola multipla/Multiple box/Boîte multiple		11/A	AH052904	40	210
Scatola multipla/Multiple box/Boîte multiple		1/4 F	AH052902	40	180

Confezione/Packing/Emballage	Mod.		Ref.		
Scatola/Box/Boîte	25/B1	11/A	AH050101	5	174
Scatola multipla/Multiple box/Boîte multiple		11/A	AH050126	40	174
Scatola multipla/Multiple box/Boîte multiple		1/4 F	AH0501109	40	140

Confezione/Packing/Emballage	Mod.		Ref.		
Scatola/Box/Boîte	25/AN	11/A	AH050501	5	174

Confezione/Packing/Emballage	Mod.		Ref.		
Scatola/Box/Boîte	25/AR	11/A	AH050901	5	189

Confezione/Packing/Emballage	Mod.		Ref.		
Scatola/Box/Boîte	25/B2	11/A	AH050301	5	195
Scatola multipla/Multiple box/Boîte multiple		11/A	AH050366	40	195
Scatola multipla/Multiple box/Boîte multiple		1/4 F	AH050386	40	162

Confezione/Packing/Emballage	Mod.		Ref.		
Scatola/Box/Boîte	25/B2 ALFA	11/A	AH050311	25	206

Confezione/Packing/Emballage	Mod.		Ref.		
Sacchetto nylon/Nylon bag/Sachet en Nylon	25/A2	11/A	AH050608	5	149

Confezione/Packing/Emballage	Mod.		Ref.		
Sacchetto nylon/Nylon bag/Sachet en Nylon	25/B3	11/A	AH050701	5	89

Confezione/Packing/Emballage	Mod.		Ref.		
Blister/Blister/Blister	KIT F1/E	11/A	AH120601	8	1478
	KIT F1/E CEE	11/A	AH120653	8	1486

Confezione/Packing/Emballage	Mod.		Ref.		
Blister/Blister/Blister	KIT F1/I	11/A	AH120610	8	1656
	KIT F1/I CEE	11/A	AH120654	8	1664

Confezione/Packing/Emballage	Mod.		Ref.		
Blister/Blister/Blister	KIT F1/S	11/A	AH120801	8	1384
	KIT F1/S CEE	11/A	AH120813	8	1392

Confezione/Packing/Emballage	Mod.		Ref.		
Scatola/Box/Boîte	KIT KB/4	11/A	AH120679	14	1171

Confezione/Packing/Emballage	Mod.		Ref.		
Blister/Blister/Blister	KIT/530	11/A	AH093801	8	817

Confezione/Packing/Emballage	Mod.		Ref.		
Scatola singola/Single box/Boîte individuelle	26/B	11/A	AH071101	5	689
Scatola multipla/Multiple box/Boîte multiple			AH071169	20	689

Confezione/Packing/Emballage	Mod.		Ref.		
Scatola singola/Single box/Boîte individuelle	26/B-TN	11/A	AH071201	5	689
Scatola multipla/Multiple box/Boîte multiple			AH071251	20	689

Confezione/Packing/Emballage	Mod.		Ref.		
Blister / Blister / Blister	26/E	11/A	AH071310	2	287

Confezione/Packing/Emballage	Mod.		Ref.		
Scatola singola / Single box / Boîte individuelle	26/LR	11/A	AH071401	5	442

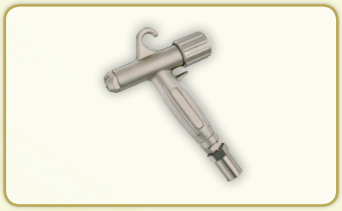

Confezione/Packing/Emballage	Mod.			Ref.		
Scatola/Box/Boîte						
Con attacco / With connector / Avec raccord	26/F	12X21	2,5	AH070801	2	556
Senza attacco / Without connector / Sans raccord	26/F alfa	3/8 F	2,5	AH070803	2	442
Con attacco / With connector / Avec raccord	26/F	12X21	3,5	AH070802	2	556
Senza attacco / Without connector / Sans raccord	26/F alfa	3/8 F	3,5	AH070804	2	442

Confezione/Packing/Emballage	Mod.		Ref.		
Sacchetto nylon/Nylon bag/Sachet en Nylon	26/CR	3/8 F	AH072101	1	272

Confezione/Packing/Emballage	Mod.			Ref.		
Sacchetto nylon/Nylon bag/Sachet en Nylon	26/CR-G	3/8 F	2,5	AH072201	1	295
		3/8 F	3,5	AH072202	1	295

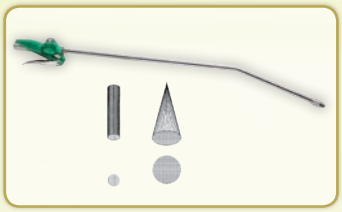

Confezione/Packing/Emballage	Mod.			Ref.		
Sacchetto nylon/Nylon bag/Sachet en Nylon	26/CR-GL	3/8F	2,5	AH072501	1	360
		3/8F	3,5	AH072502	1	360

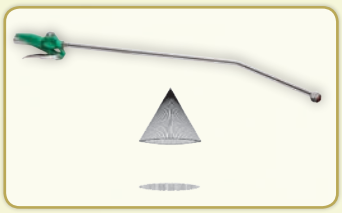

Confezione/Packing/Emballage	Mod.		Ref.		
Sacchetto nylon/Nylon bag/Sachet en Nylon	26/CR-VL	3/8 F	AH072601	1	370

Confezione/Packing/Emballage	Mod.		Ref.		
Sacchetto nylon/Nylon bag/Sachet en Nylon	26	11/A	AH071001	5	26

LISTA DEI RICAMBI/*SPARE PARTS LIST*/PIECES DETACHEES

25/B-RB

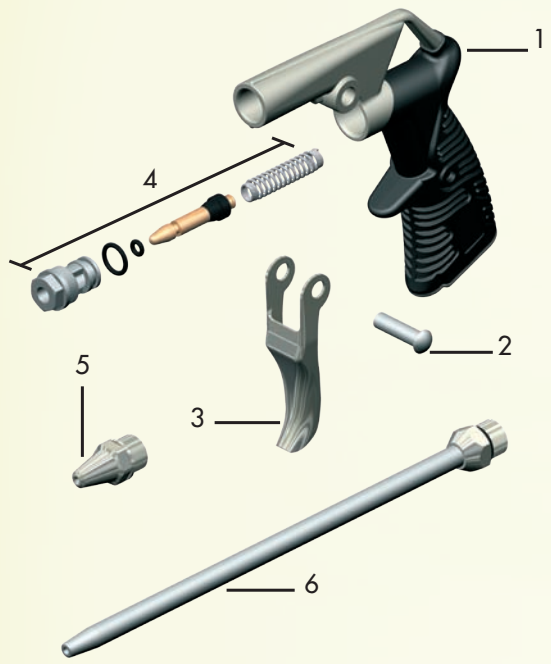

Mod.	Pos.	Ref.
	1	BH058244
	2	BF088243
	3	BL058001
	4	BH058042
25/B1-RB	5	BS058005
25/B2-RB	6	BH058006

25/B

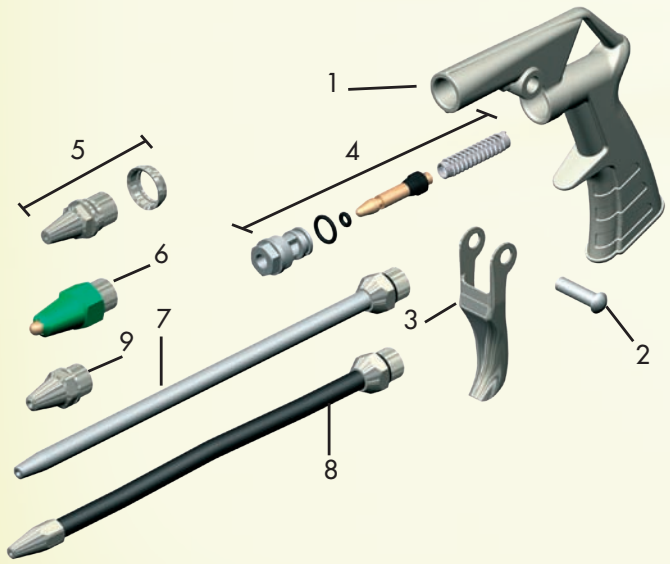

Mod.	Pos.	Ref.
	1	BU058016
	2	BF088243
	3	BL058001
	4	BH058042
25/AN	5	BH058007
25/AR	6	BH058119
25/B2	7	BH058006
25/B2 alfa	8	BH058038
25/B1	9	BS058005

LISTA DEI RICAMBI/*SPARE PARTS LIST*/PIECES DETACHEES

25/A2

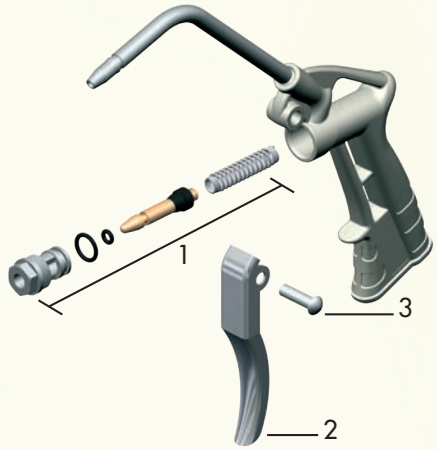

Pos.	Ref.
1	BH058042
2	BL058002
3	BF088033

25/B3

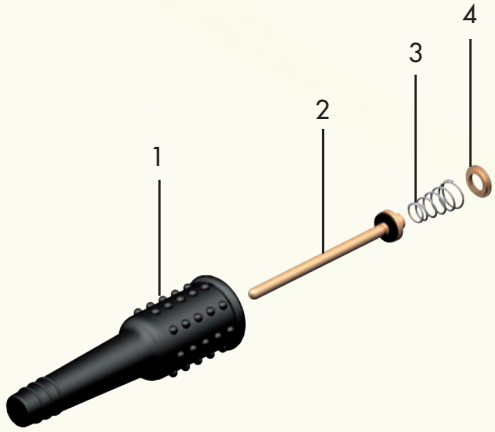

Pos.	Ref.
1	BE058026
2	BH058029
3	BA078105
4	BS058078

KIT 530

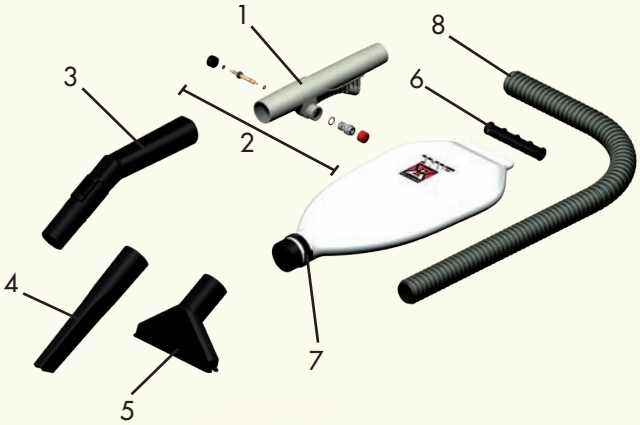

Pos.	Ref.
1	BU098392
2	BH098410
3	BE098388
4	BE098390
5	BE098389
6	BE098054
7	BH098230
8	BU098391

LISTA DEI RICAMBI/*SPARE PARTS LIST*/PIECES DETACHEES

26/B

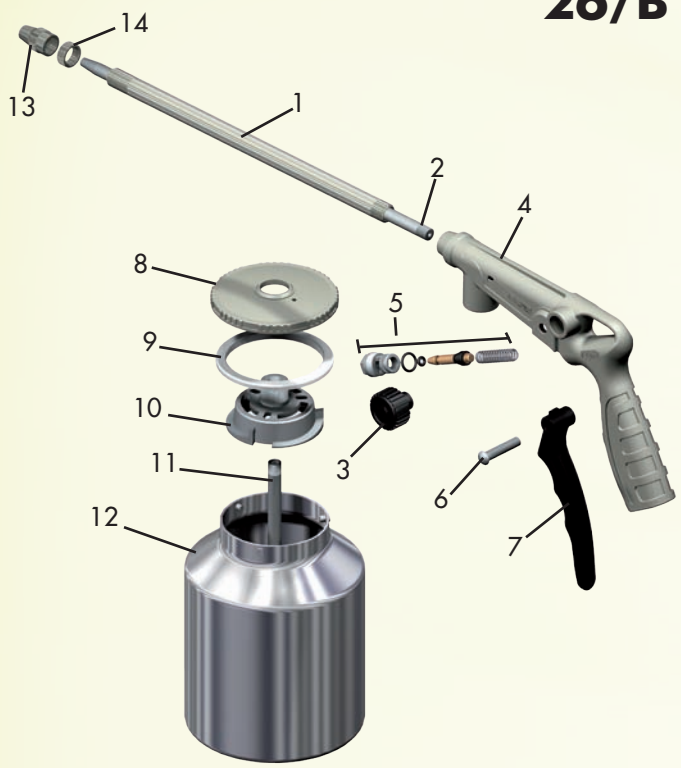

Pos.	Ref.
1	BT078098
2	BU078083
3	BH078139
4	BU078134
5	BH058042
6	BF078138
7	BE078250
8	BU078137
9	BB078203
10	BU078136
11	BT078017
12	BL078019
13	BS078020
14	BS078024

26/B-TN

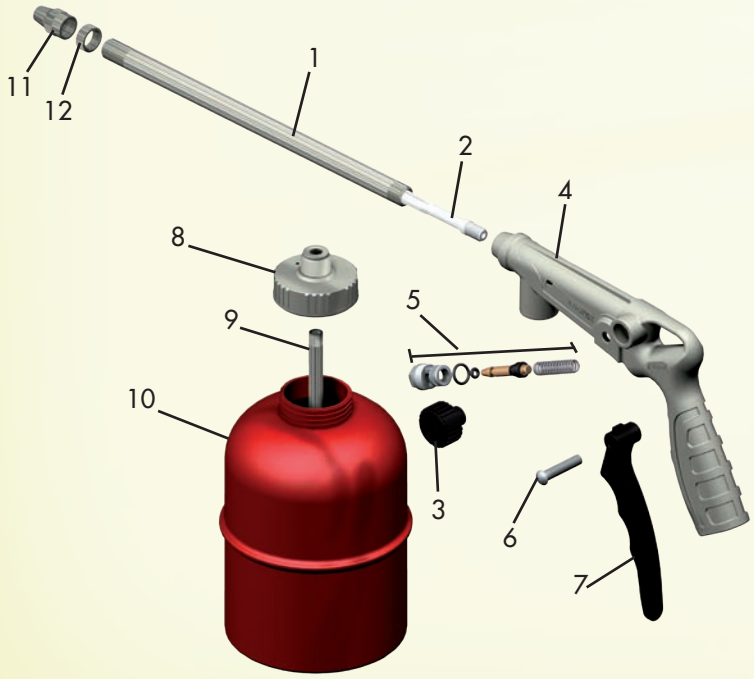

Pos.	Ref.
1	BT078098
2	BE078097
3	BH078139
4	BU078134
5	BH058042
6	BF078138
7	BE078250
8	BU078148
9	BT078017
10	BL078151
11	BS078020
12	BS078024

LISTA DEI RICAMBI/*SPARE PARTS LIST*/PIECES DETACHEES

26/LR

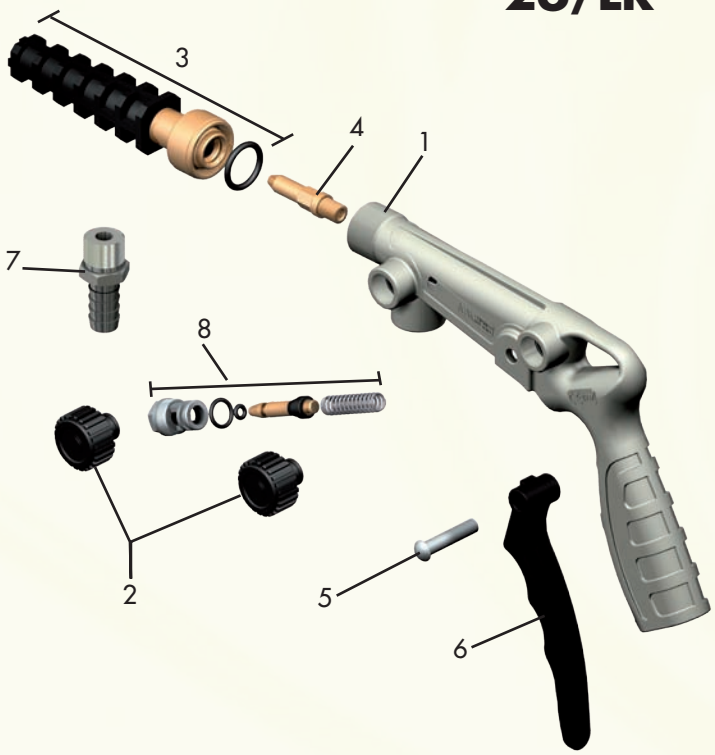

Pos.	Ref.
1	BU078135
2	BH078139
3	BH078168
4	BS078146
5	BF078138
6	BE078250
7	AS010412
8	BH058042

26/F

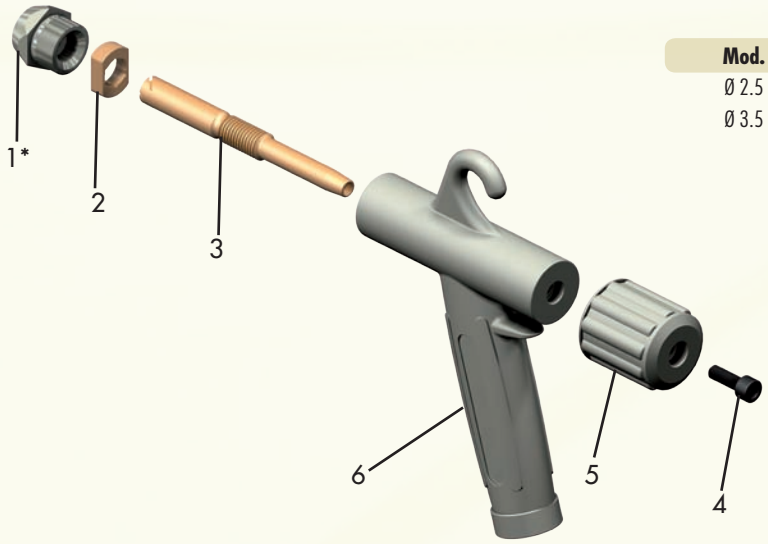

Mod.	Pos.	Ref.
Ø 2.5	1*	BS078042
Ø 3.5	1*	BS078046
	2	BS078048
	3	BS078049
	4	BF078051
	5	BU078052
	6	BU078054

LISTA DEI RICAMBI/*SPARE PARTS LIST*/PIECES DETACHEES

www.studiograficoedgraf.com 03/2009

26/CR 26/CR-G 26CR-GL 26/CR-VL

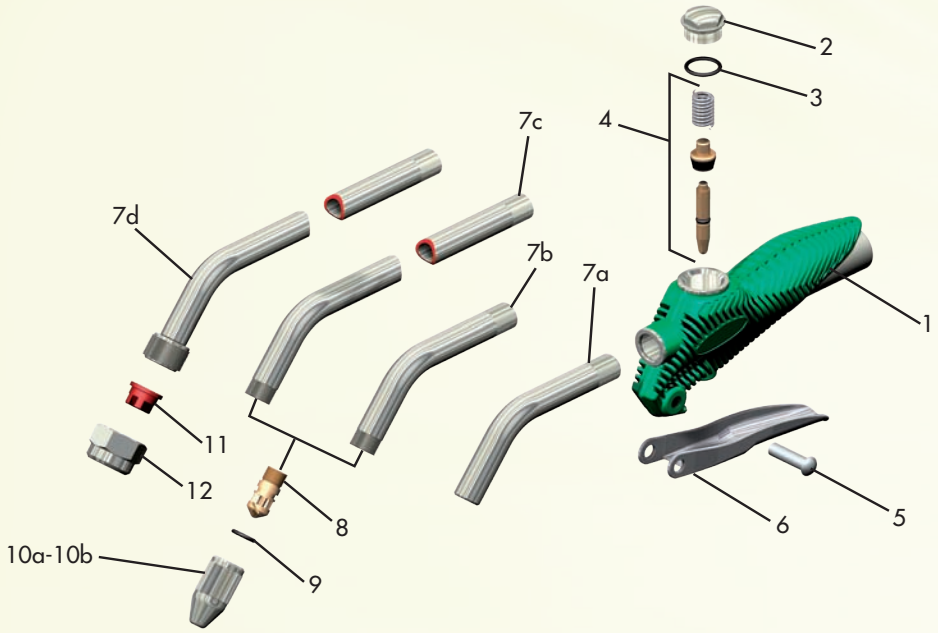

Mod.	Pos.	Ref.
	1	BH078176
	2	BS078026
	3	BD078091
	4	BH078012
	5	BF088243
	6	BL078035
26/CR	7a	BS078304
26/CR-G	7b	BS078178

Mod.			Pos.	Ref.
		26CR-GL	7c	BS078305
		26/CR-VL	7d	BH078313
	26/CR-G	26CR-GL	8	BS078199
	26/CR-G	26CR-GL	9	BD118374
2,5	26/CR-G	26CR-GL	10a	BS078182
3,5	26/CR-G	26CR-GL	10b	BS078180
		26/CR-VL	11	BS098595
		26/CR-VL	12	BS098593

26

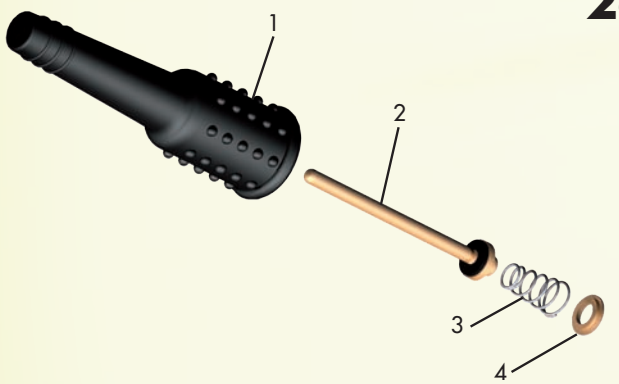

Pos.	Ref.
1	BE078094
2	BH058029
3	BA078105
4	BS058078

Officine Meccaniche ANI S.p.A.
Via Arzignano 190, 36072 Chiampo (VI) Italy - Tel. +39 0444 420 888 - Fax +39 0444 420 620 - www.ani.it - ani@ani.it