Waste oil drainers for DRUM

15 litre adjustable bowl

Wheel-mounted waste oil drainers. Ideal for use with jerry cans, drums and containers of various sizes, up to 220 kg. Suitable for gravity draining of engine, gearbox and differential oil from all motor vehicles placed on an car lift or pit.
The height-adjustable **bowl** (15 litres) is mounted on a swivel joint that facilitates positioning.

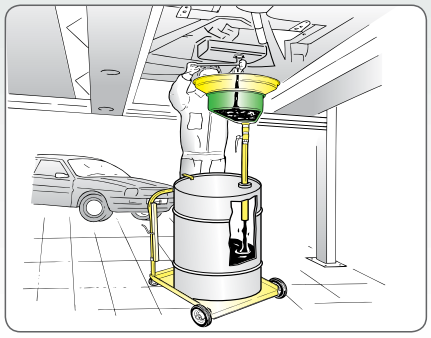

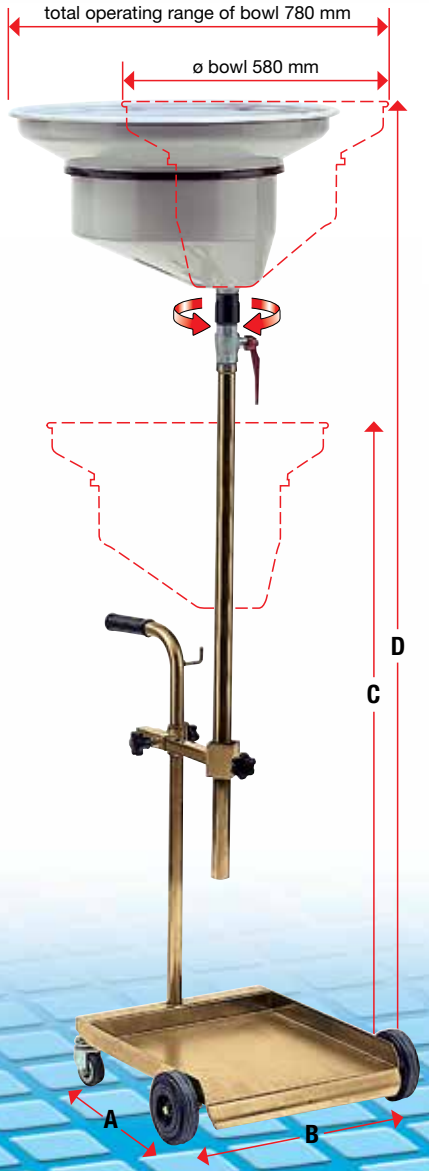

		adjustable bowl	wheel-mounted	wheel-mounted
Article		**42004**	**42050**	**42000**
Trolley capacity	litres	-	20 - 60	180 - 220
trolley	Art.	-	80050	80200
Bowl capacity	litres	15	15	15
Antisplash screen		yes	yes	yes
Drum clamping ring		yes	yes	yes
Packing	N° - m³	1 - 0,350	2 - 0,120	2 - 0,150
Weight	kg	9	17	29
Dimensions (A - B - C)	cm	58 - 58 - 115	64 - 50 - 120	70 - 77 - 130
Max dimensions (D)	cm	115	180	180

Caution: do not use with flammable or corrosive liquids

Details and advantages

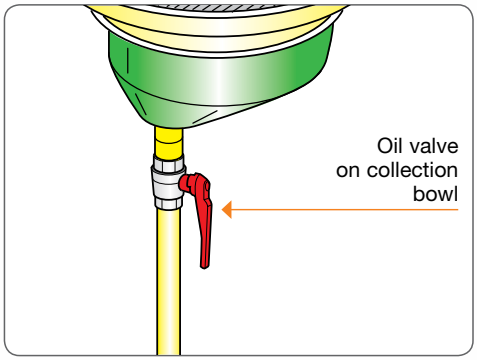

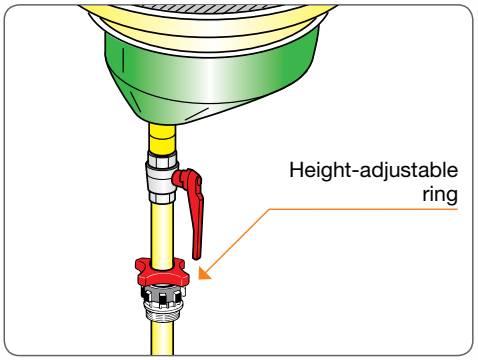

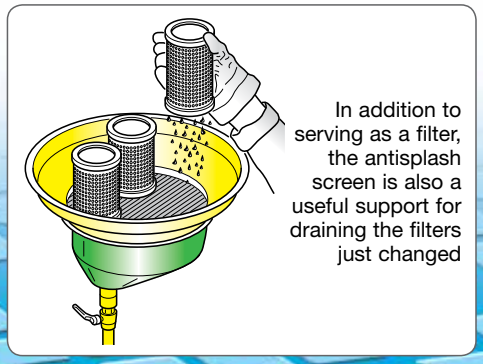

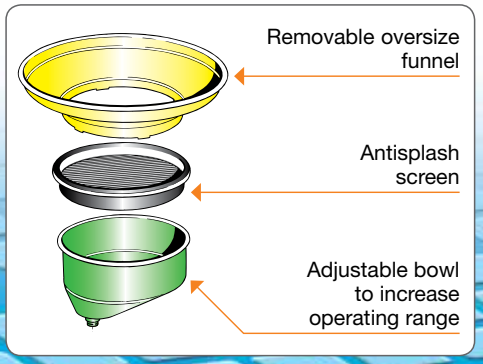

Waste oil **pit drainer**

Pit waste oil drainers.
Suitable for gravity draining of engine, gearbox and differential oil from all motor vehicles placed on a pit. Equipped with antisplash screen which can be used as a support for draining oil filters.

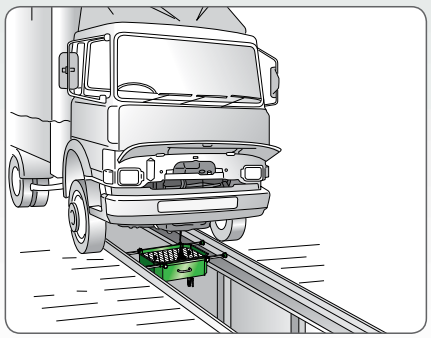

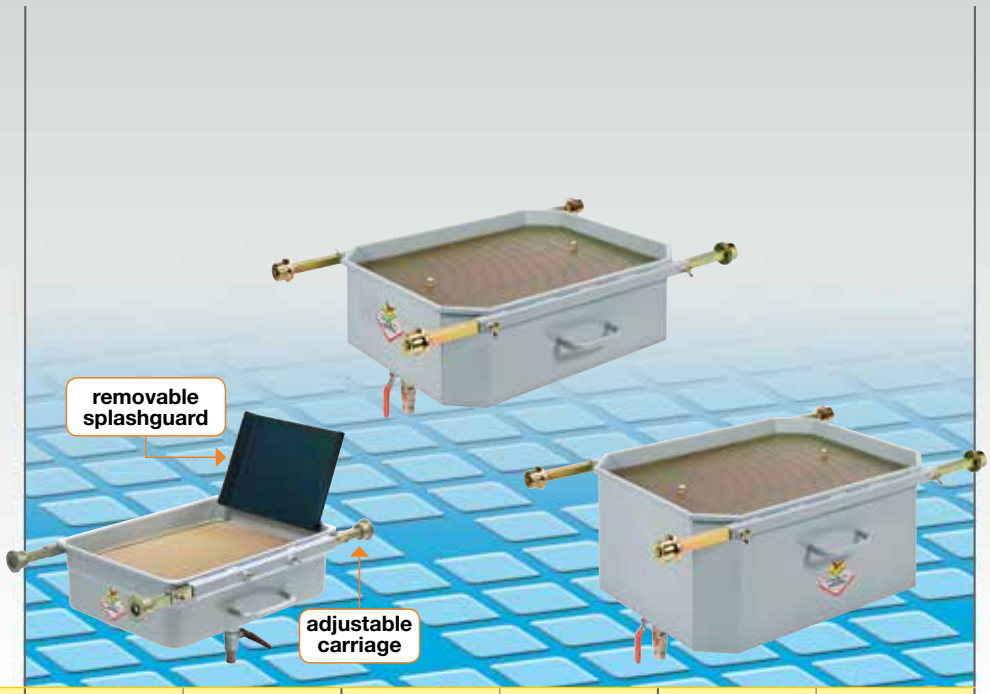

Article	42059	42060	42061	42062	42055	42056
Tank capacity litres	65	65	110	110	150	150
Wheels	adjustable carriage	adjustable carriage	adjustable carriage	adjustable carriage	adjustable carriage	adjustable carriage
Emptying	by suction	by gravity	by suction	by gravity	by suction	by gravity
Equipped with	quick-release connector	hose-holder ø 30	quick-release connector	hose-holder ø 30	quick-release connector	hose-holder ø 30
Packing N° - m³	1 - 0,140	1 - 0,140	1 - 0,220	1 - 0,220	1 - 0,270	1 - 0,270
Weight kg	27,5	28	39,5	40	53,5	54
Dimensions (A - B - C) cm	51 - 66 - 22	51 - 66 - 22	63,5 - 79 - 26,4	63,5 - 79 - 26,4	63,5 - 79 - 35,7	63,5 - 79 - 35,7
Dimensions (D - E) cm	75 - 120	75 - 120	84 - 125	84 - 125	84 - 125	84 - 125

Caution: do not use with flammable or corrosive liquids

Antisplash screen

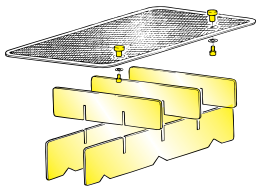

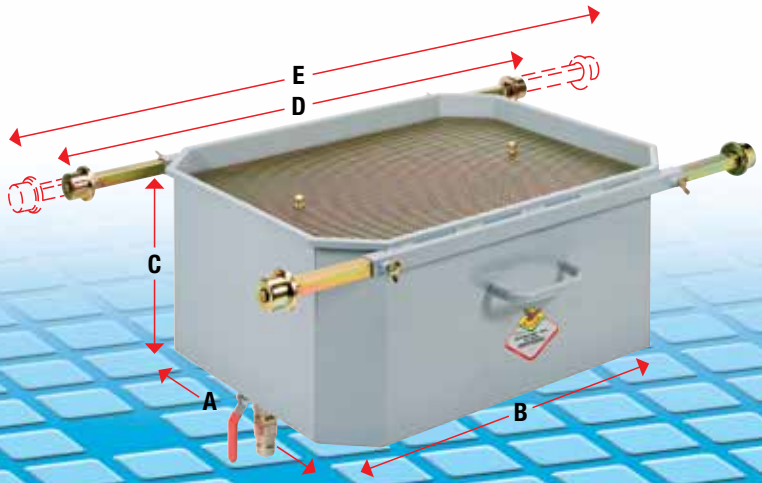

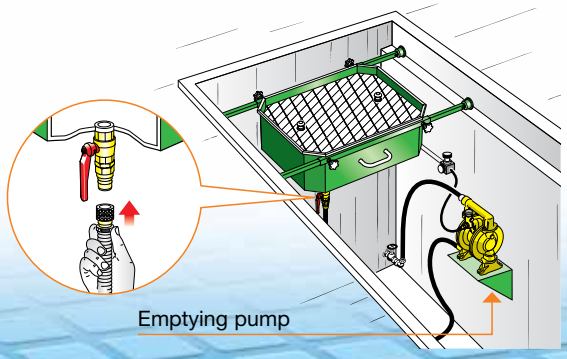

The drained oil can be transferred from the collection bowl to the storage tank by gravity or by using an emptying pump connected to the fixed system

Waste oil **floor drainer**

Wheel-mounted floor waste oil drainers. Suitable for gravity draining of engine, gearbox and differential oil from all motor vehicles. Equipped with antisplash screen which can be used as a support for draining oil filters.

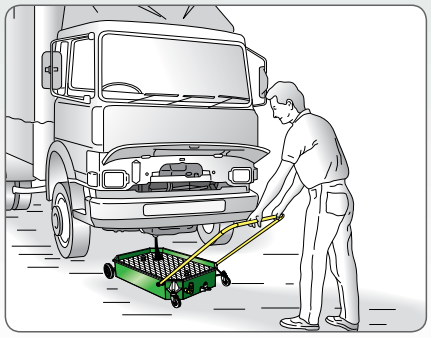

Article	42069	42070	42072	42073	42075	42076
Tank capacity litres	50	50	95	95	150	150
Wheels	4 castors	4 castors	2 castors + 2 fixed	2 castors + 2 fixed	2 castors + 2 fixed	2 castors + 2 fixed
Emptying	by suction	by suction	by suction	pneumatic	by suction	pneumatic
Equipped with	quick-release connector	juction tube	quick-release connector	pump 33070	quick-release connector	pump 33/2011NHHV2
Packing N° - m³	1 - 0,140	1 - 0,140	1 - 0,200	1 - 0,200	1 - 0,330	1 - 0,330
Weight kg	20,5	21	37,5	40	53	61
Dimensions (A - B - C) cm	63 - 66 - 23,5	63 - 66 - 23,5	72,5 - 99 - 20	72,5 - 99 - 20	74,2 - 99,6 - 29,5	74,2 - 99,6 - 29,5
Dimensions (D - E) cm	78	78	119,9	119,9	123,8	123,8

Caution: do not use with flammable or corrosive liquids

Antisplash screen

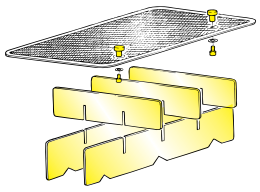

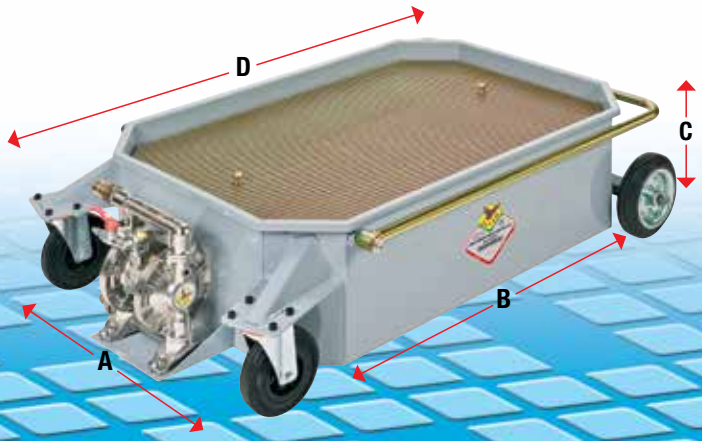

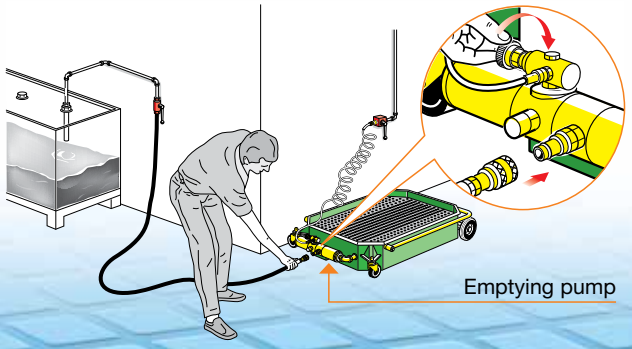

The drained oil can be transferred from the collection bowl to the storage tank by suction with the incorporated probe or by an emptying pump connected to the fixed system or mounted directly on the collection basin