FRONTAL
service columns

Frontal service columns. Ideal service stations for rationalising the areas dedicated to delivery. Installable on walls, connected to the centralised distribution system, they are real independent operational stations. Made from top quality materials, with scratchproof painting.

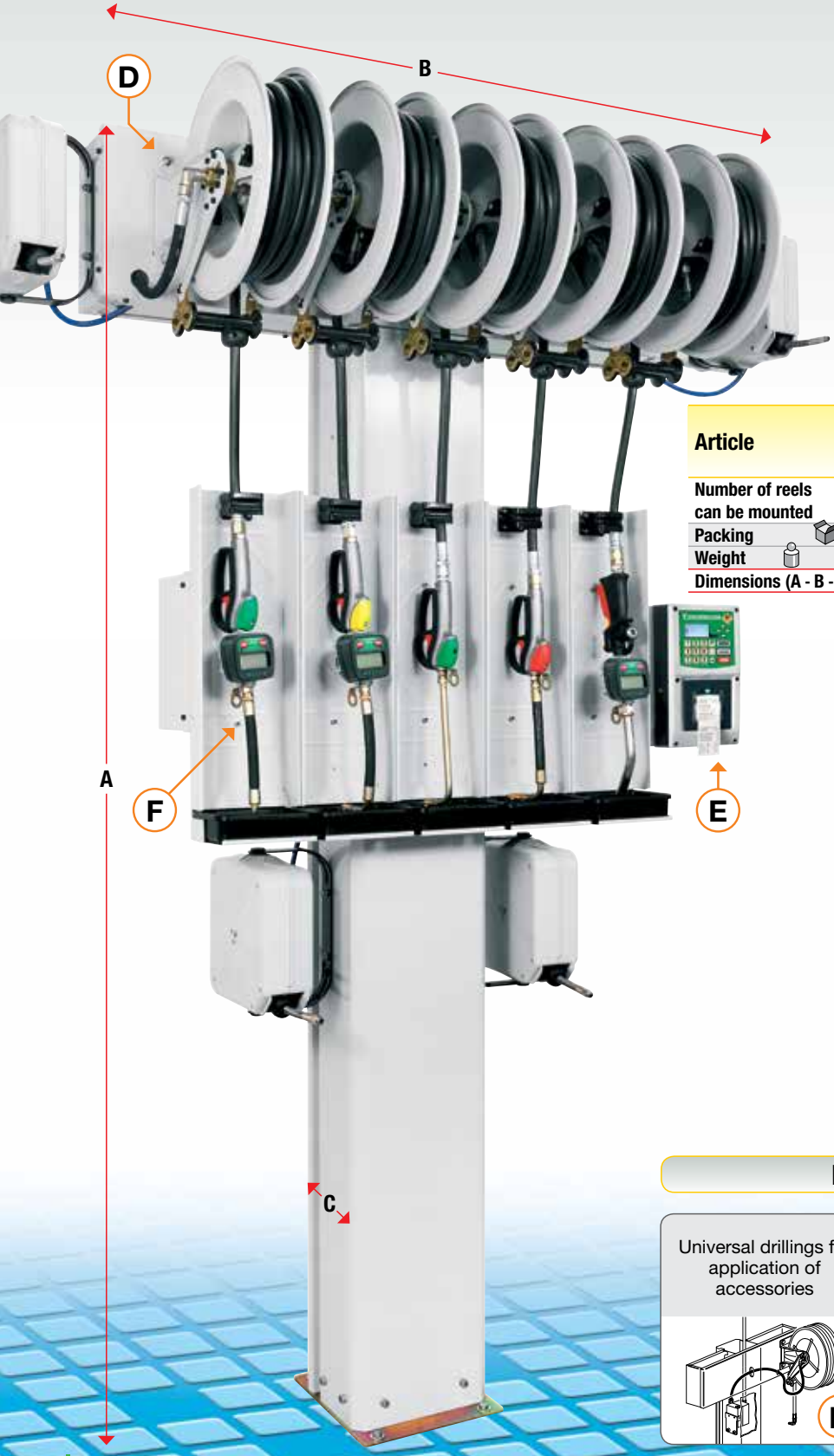

Article		39323	39334	39335
Number of reels can be mounted		3	4	5
Packing	N° - m³	1 - 0,265	1 - 0,460	1 - 0,460
Weight	kg	54,5	84,5	91
Dimensions (A - B - C)	cm	245 - 86 - 13	251 - 110 - 24	251 - 134 - 24

Art. **88630**
Modular drip-tray.
Equipped with hook for gun and removable drip-tray.
Applied under the hose reel, it is a handy holder for the delivery gun.
Essential for a clean and orderly workplace.

Details and advantages

Universal drillings for application of accessories

Arrangement for fixing the fluids control system

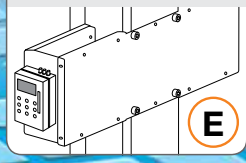

Holes for drip tray

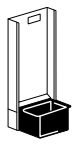

	39322	39422 AISI 304 S. Steel	39320 for suction	39321	39421 AISI 304 S. Steel
	2	2	1	1	1
	1 - 0,265	1 - 0,265	1 - 0,265	1 - 0,265	1 - 0,265
	48,5	44	41	42	37
	245 - 62 - 13	245 - 62 - 13	245 - 29 - 12,5	245 - 29 - 12,5	245 - 29 - 12,5

The upper part of the support is arranged with holes for the application of hose reels series 330 - 390 - 430 - 450 - 530 and solenoid valves for stopping the fluid. The drip-tray can be applied frontally.

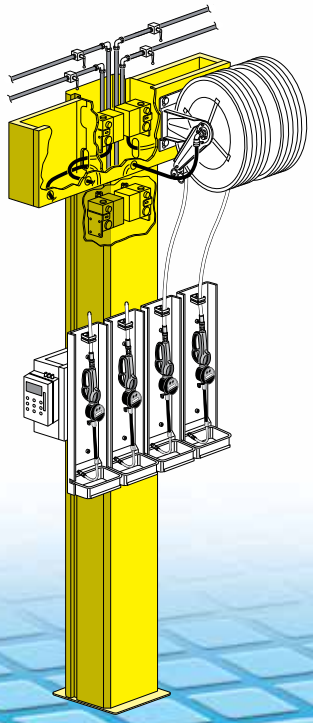

Ceiling installation

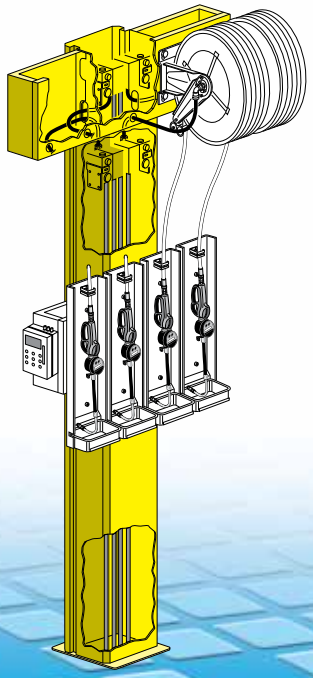

Floor installation