SERIES 500 MANUAL

PAINTED STEEL

Manual rewinding hose reels are an easy and practical way to manage flexible hoses. Operation is extremely simple and needs very little maintenance. Made with high quality materials with a robust frame, manual rewinding hose reels are an inexpensive alternative to spring rewinding hose reels particularly for very long hoses.

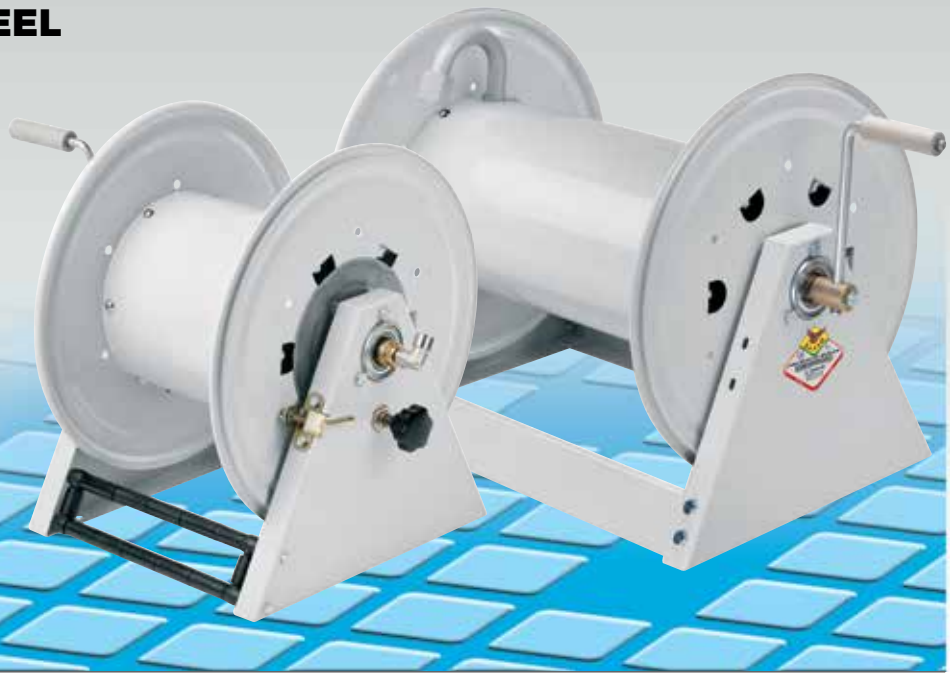

Note: all the hose reels in the following chart are without hose	width 240 mm	width 320 mm	width 460 mm	width 600 mm	Connection inlet	Connection outlet
Air - Water 20 bar - brass swivel joint - **"viton"** seals	7522001.100	7532001.100	7552001.100	7562001.100	1"	1"
	7522001.150	7532001.150	7552001.150	7562001.150	1/2"	1/2"
Water max 130° C 100 bar - AISI 304 stainless steel swivel joint - **"viton"** seals	7522001.200	7532001.200	7552001.200	7562001.200	1"	1"
	7522001.250	7532001.250	7552001.250	7562001.250	1/2"	1/2"
Water max 130° C 200 bar - AISI 304 stainless steel swivel joint - **"viton"** seals	7522001.300	7532001.300	7552001.300	7562001.300	3/8"	1/2"
Oil and similar products 150 bar - carbon steel swivel joint - **"polyurethane"** seals	7522001.400	7532001.400	7552001.400	7562001.400	1"	1"
	7522001.450	7532001.450	7552001.450	7562001.450	1/2"	1/2"
Diesel fuel 10 bar - brass swivel joint - **"viton"** seals	7522001.100	7532001.100	7552001.100	7562001.100	1"	1"

Hose reel capacity		L240	L320	L460	L600
	ø 3/8"	50 m	80 m	120 m	160 m
	ø 1/2"	40 m	70 m	105 m	140 m
	ø 3/4"	25 m	40 m	60 m	80 m
	ø 1"	20 m	30 m	45 m	60 m

OVERALL DIMENSIONS

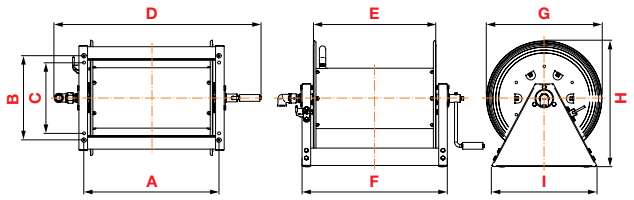

Art.	A	B	C	D	E	F	G	H	I	1-m³	Kg
L 240	297	373	313	631	242	342	510	555	468	0,208	25,2
L 320	377	373	313	711	322	422	510	555	468	0,243	26,8
L 460	517	373	313	851	462	562	510	555	468	0,304	29,3
L 600	657	373	313	991	602	702	510	555	468	0,365	31,9
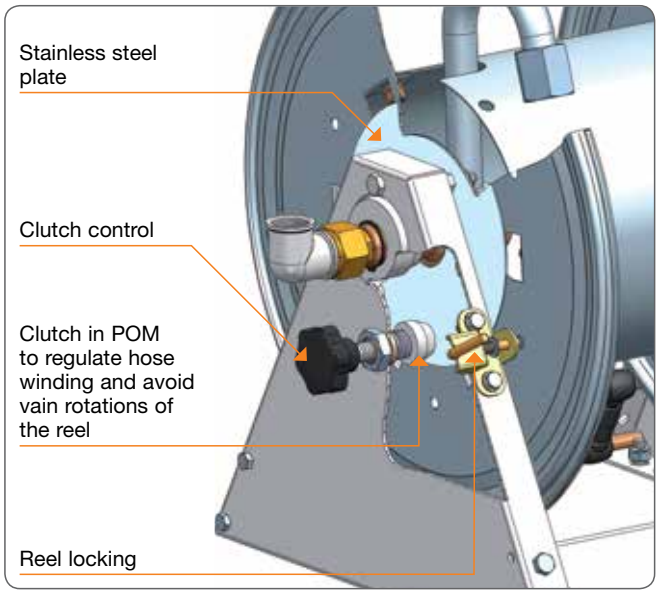
Technical features