MANUAL HOSE REELS

No. 222-AM

ADVANCED FLUID
MANAGEMENT SOLUTIONS

TIMELESS ENDURANCE AND TOUGHNESS

ADVANCED FLUID
MANAGEMENT SOLUTIONS

www.raasm.com

ADVANCED FLUID MANAGEMENT SOLUTIONS

at your service since 1975

RAASM works to offer the best through continuous improvement, in terms of performance, functionality and reliability of its products.

5 YEARS WARRANTY

CE Made In Italy

STUDY, RESEARCH AND DESIGN

The real strength of a firm starts with the ability of its study and research departments to always find the most suitable solutions to address market demands.

ASSEMBLY LINES

Dedicated equipment specially designed to facilitate assembly operations, at the same time allowing an effective and automatic control of quality.

PACKAGING

The product is carefully packaged with special security measures that protect it from any risks during transportation.

STORAGE OF COMPONENTS

Our vertical stores enable quick and careful preparation of the components and spare parts intended for assembly and sale.

TECHNOLOGY

INNOVATION

QUALITY

SAFETY

RELIABILITY

ADVANCED FLUID MANAGEMENT SOLUTIONS

TECHNICAL ASSISTANCE

RAASM has the most complete range of products for lubrication and the dispensing of fluids. The aim is to always respond fully to the questions of our customers and meet all their needs.

Strength points

- security system that **prevents the handle rotation** while the hose unreels, thus avoiding accidental damages to people or things
- **AISI 304 or AISI 316 stainless steel** version for particularly aggressive environments
- epoxy powder **paint** with a minimum thickness of 80µm **that ensures endurance and protection** for the painted stainless steel version
- **max reel capacity.** The spring absence allows for the maximum utilization of the drum space
- great **handling** thanks to its lightweight
- available with **rotation** block for use in environments with vibrations (trucks, industrial machines, etc)
- the Series 700 allows for the **customization of the reeling side**
- **compatible with numerous fluids types,** also aggressive (see compatibility chart)

unreel with SAFETY

INDEX

Series 430	page	**12**
Technical characteristics	page	**10**

Series 430 ABS	page	**13**
Technical characteristics	page	**10**

Series 530	page	**14**
Technical characteristics	page	**10**

Series 540	page	**15**
Technical characteristics	page	**10**

The handle rotation lock system, designed by RAASM, allows you to work without any concerns.

Series 560	page	16
Technical characteristics	page	10

Series 500	page	20
Technical characteristics	page	18

Series 700	page	24
Technical characteristics	page	22
Accessories	page	26
Chemical compatibility	page	28

Series 430-530-540-560
TECHNICAL **CHARACTERISTICS**

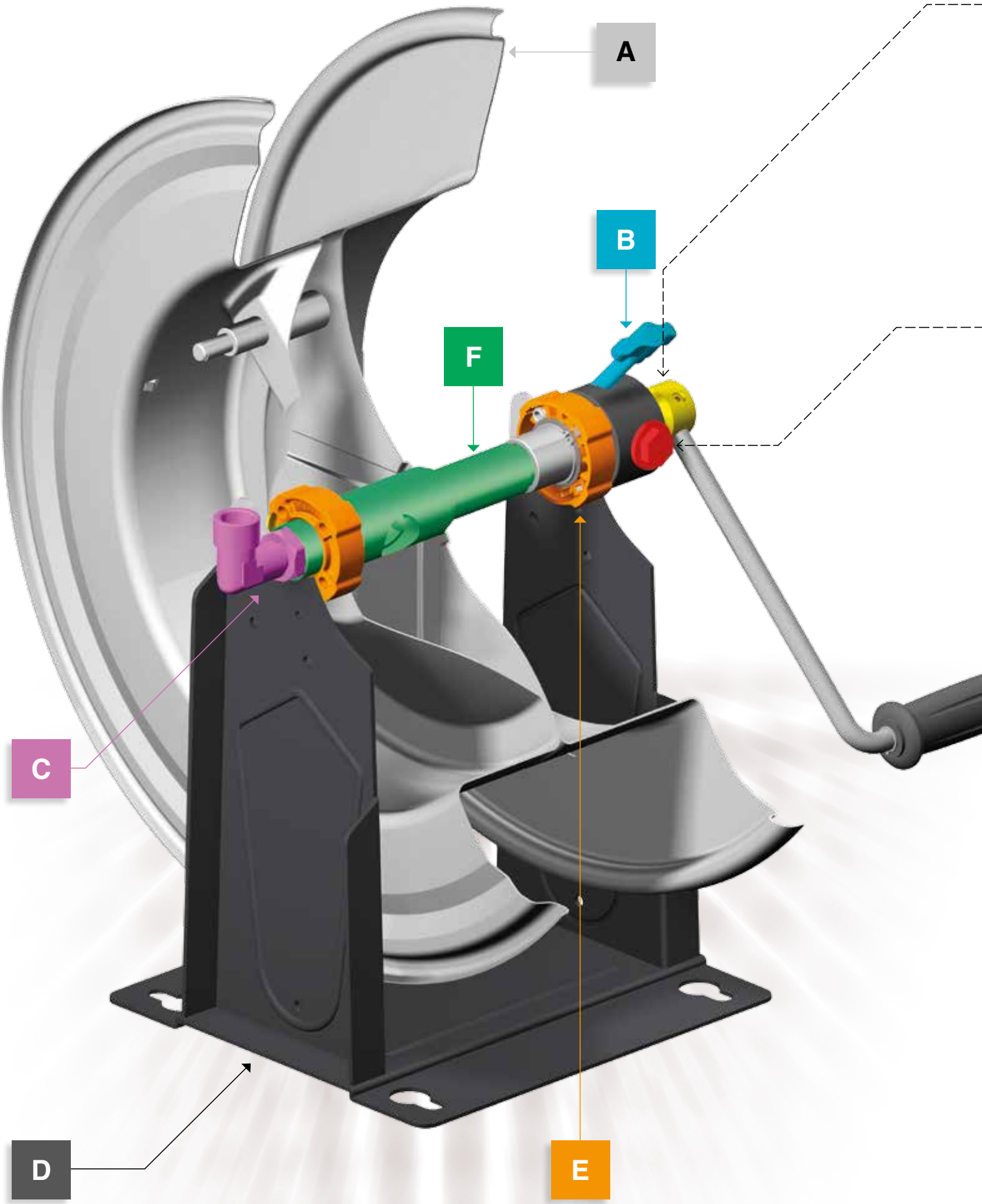

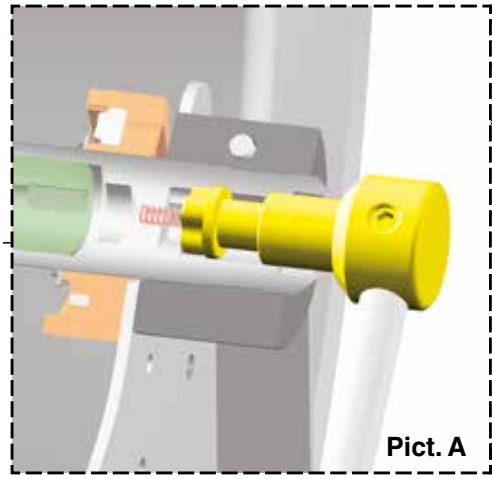

Pict. A

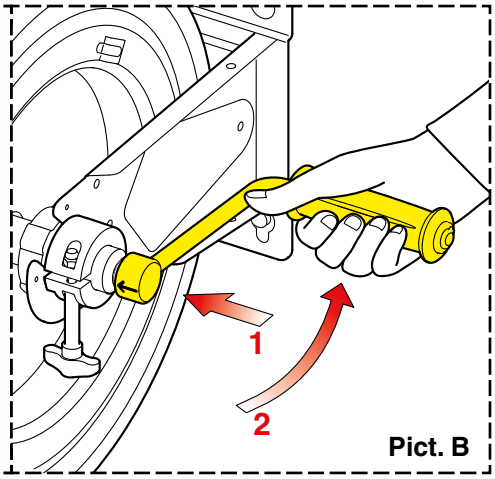

Pict. B

SECURITY SYSTEM

The hose reel is designed with a new security system that allows the handle to stay in place, avoiding the rotation during the manual hose unreeling (Picture A).

To rewind the hose, use the handle as follows (Picture B):

1 press on the knob that connects the handle to the drum

2 rotate handle counterclockwise

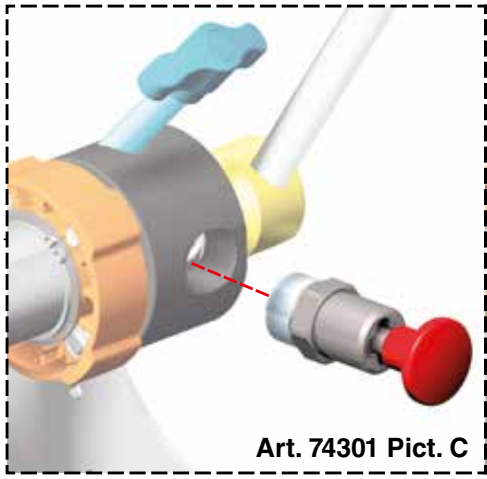

Art. 74301 Pict. C

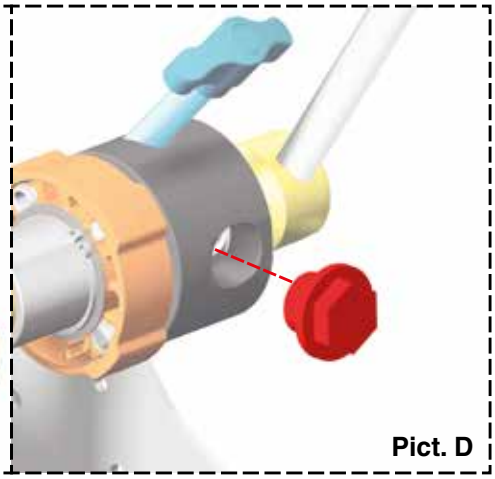

Pict. D

P/N 74301
ROTATION LOCK (Picture C)

This special device stops any drum movement and is available only on request.

Its use is highly recommended during moving applications (i.e. trucks, machineries subject to vibrations, etc.).

STOPPER (Picture D)

In the absence of the rotation lock, a stopper will protect the clutch from foreign particles accessing it.

A **DRUM**
Sturdy and practical, with beads to reinforce the structure and rounded border.
Available with painted steel, ABS schock proof drum, AISI 304 or AISI 316 stainless steel version.

B **REGULATION CLUTCH**
Allows to regolate the drum rotation speed during the hose unwinding. it works also as a rotation lock.

C **SWIVEL JOINT**
Designed with the ideal internal dimensions to guarantee the most possible flow. It is realized, depending on the model, in brass, galvanized steel, AISI 304 or AISI 316 stainless steel, with seals in Polyurethane, Viton® and Teflon®.

D **WALL BRACKET**
Solid and compact in painted steel, AISI 304 or AISI 316 stainless steel bracket with 4 slotted mounting holes for easy and safe installation.

E **DRUM SUPPORT BUSHINGS**
Drum support bushings in Tenaxid, self lubricating, material resistant against corrosion.

F **CENTRAL PIN**
In galvanized steel or in stainless steel AISI 304 or AISI 316.
Suitable to work with different kinds of fluids and with passages sized to avoid pressure losses.

HOSE REEL INSTALLATION

Bench installation

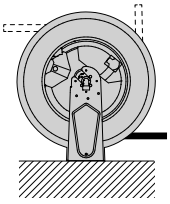

Wall installation

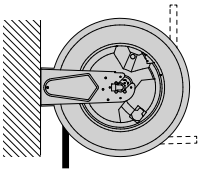

Ceiling installation

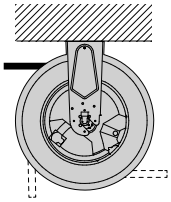

Hose reel Series 430
MANUAL

Both the drum and the bracket in the **Series 430 manual hose reels** are in painted steel or AISI 304 or AISI 316 stainless steel. This contributes to their resistance in time and in particularly aggressive environments.

PAINTED STEEL

AISI 304 - 316 STAINLESS STEEL

Toughness and endurance

Note: All the hose reels in the table are without hose

	PAINTED STEEL	AISI 304 S. STEEL	AISI 316 S. STEEL	Connection	
	P/N	P/N	P/N	inlet	outlet
Air - Water 20 bar - **brass** swivel joint - **Viton®** seals	74300.100	74320.100	-	F1/2"G	F1/2"G
Water max 130° C 100 bar - **AISI 304 stainless steel** swivel joint - **Viton®** seals	74300.200	74340.200 *	74350.200 **	F1/2"G	F1/2"G
Water max 130° C 200 bar - **AISI 304 stainless steel** swivel joint - **Viton®** seals	74300.300	74340.300	74350.300 **	F3/8"G	F1/2"G
Water max 130° C 400 bar - **AISI 304 stainless steel** swivel joint - **Teflon®** seals	74300.350	74340.350	74350.350 **	F3/8"G	F1/2"G
Oil and similar 150 bar - **galvanized steel** swivel joint - **"polyurethane"** seals	74300.400	-	-	F1/2"G	F1/2"G
Grease 600 bar - **galvanized steel** swivel joint - **"polyurethane"** seals	74300.500	74320.500	-	F 3/8" G	F 1/2" G
Diesel fuel 10 bar - **brass** swivel joint - **Viton®** seals	74300.600	74320.600	-	F 1/2" G	M 1/2" G
				for hoses from 5/8" and 3/4"	

Note: for special fluids see the compatibility table at page 28 * suitable also for oil ** **AISI 316 stainless steel** swivel joint

HOSE REEL CAPACITY

Ø HOSE EXTERNAL		SERIES 430
1/4"	14 mm	Length max 40 m
3/8"	17 mm	Length max 18 m
1/2"	20 mm	Length max 15 m
5/8"	21 mm	Length max 12 m
3/4"	27 mm	Length max 8 m

OVERALL DIMENSIONS (mm)

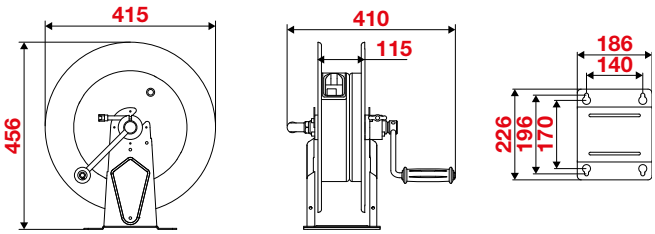

N°1 packing m³ 0,110 kg 11

Hose reel Series 430 ABS MANUAL

with ABS shock proof drum

The ABS Series 430 manual hose reels present the same advantages of the manual hose reels' family but are easier to handle thanks to the ABS drum that reduces their weight.

Handiness and weight

Note: All the hose reels in the table are without hose	PAINTED STEEL	STAINLESS STEEL	Connection	
	P/N	P/N	inlet	outlet
Air - Water 20 bar - **brass** swivel joint - **Viton®** seals	74305.100	74325.100	F1/2"G	F1/2"G
Water max 130° C 100 bar - **AISI 304 stainless steel** swivel joint - **Viton®** seals	74305.200	74345.200 *	F1/2"G	F1/2"G
Water max 130° C 200 bar - **AISI 304 stainless steel** swivel joint - **Viton®** seals	74305.300	74345.300	F3/8"G	F1/2"G
Water max 130° C 400 bar - **AISI 304 stainless steel** swivel joint - **Teflon®** seals	74305.350	74345.350	F3/8"G	F1/2"G
Oil and similar 150 bar - **galvanized steel** swivel joint - **"polyurethane"** seals	74305.400	-	F1/2"G	F1/2"G
Grease 600 bar - **galvanized steel** swivel joint - **"polyurethane"** seals	74305.500	74325.500	F 3/8" G	F 1/2" G
Diesel fuel 10 bar - **brass** swivel joint - **Viton®** seals	74305.600	74325.600	F 1/2" G	M 1/2" G
			for hoses from 5/8" and 3/4"	

Note: for special fluids see the compatibility table at page 28

* suitable also for oil

HOSE REEL CAPACITY

Ø HOSE EXTERNAL		SERIES 430 ABS
1/4"	14 mm	Length max 40 m
3/8"	17 mm	Length max 18 m
1/2"	20 mm	Length max 15 m
5/8"	21 mm	Length max 12 m
3/4"	27 mm	Length max 8 m

OVERALL DIMENSIONS (mm)

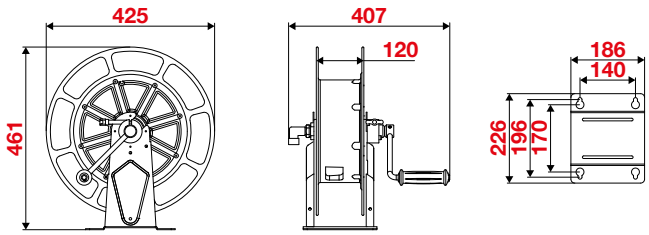

N°1 packing m³ 0,110 kg 9

Hose reel Series 530
MANUAL

With the Series 530 manual hose reels, dimensions increase, guaranteeing a greater standard of rewinding length.

Endurance and capacity

PAINTED STEEL

AISI 304 - 316 STAINLESS STEEL

Note: All the hose reels in the table are without hose

	PAINTED STEEL	AISI 304 S. STEEL	AISI 316 S. STEEL	Connection	
	P/N	P/N	P/N	inlet	outlet
Air - Water 20 bar - **brass** swivel joint - **Viton®** seals	75300.100	75320.100	-	F1/2"G	F1/2"G
Water max 130° C 100 bar - **AISI 304 stainless steel** swivel joint - **Viton®** seals	75300.200	75340.200 *	75350.200 **	F1/2"G	F1/2"G
Water max 130° C 200 bar - **AISI 304 stainless steel** swivel joint - **Viton®** seals	75300.300	75340.300	75350.300 **	F3/8"G	F1/2"G
Water max 130° C 400 bar - **AISI 304 stainless steel** swivel joint - **Teflon®** seals	75300.350	75340.350	75350.350 **	F3/8"G	F1/2"G
Oil and similar 150 bar - **galvanized steel** swivel joint - **"polyurethane"** seals	75300.400	-	-	F1/2"G	F1/2"G
Grease 600 bar - **galvanized steel** swivel joint - **"polyurethane"** seals	75300.500	75320.500	-	F 3/8" G	F 1/2" G
Diesel fuel 10 bar - **brass swivel** joint - **Viton®** seals	75300.600	75320.600	-	F 1" G	F 1" G

Note: for special fluids see the compatibility table at page 28 * suitable also for oil ** **AISI 316 stainless steel** swivel joint

HOSE REEL CAPACITY

Ø HOSE EXTERNAL		SERIES 530
1/4"	14 mm	Length max 60 m
3/8"	17 mm	Length max 35 m
1/2"	20 mm	Length max 25 m
5/8"	21 mm	Length max 18 m
3/4"	27 mm	Length max 15 m
1"	34 mm	Length max 7 m

OVERALL DIMENSIONS (mm)

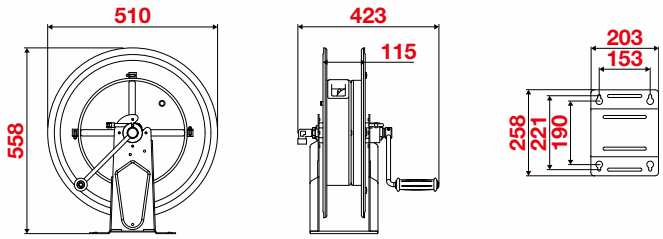

N°1 packing m³ 0,156 kg 15,5

Hose reel Series 540
MANUAL

The Series 540 manual hose reel is an efficient and simple solution to the handling of flexible hoses even up to 1”.

PAINTED STEEL

AISI 304 - 316 STAINLESS STEEL

Endurance and capacity with hoses up to 1”

Note: All the hose reels in the table are without hose

	PAINTED STEEL	AISI 304 S. STEEL	AISI 316 S. STEEL	Connection	
	P/N	P/N	P/N	inlet	outlet
Air - Water 20 bar - **brass** swivel joint - **Viton®** seals	75400.100	75420.100	-	F 1” G	F 1” G
	75400.105	75420.105	-	F 1/2” G	F 1/2” G
Water max 130° C 100 bar - **AISI 304 stainless steel** swivel joint - **Viton®** seals	75400.200	75440.200 *	75450.200 **	F 1” G	F 1” G
	75400.205	75440.205 *	-	F 1/2” G	F 1/2” G
Water max 130° C 200 bar - **AISI 304 stainless steel** swivel joint - **Viton®** seals	75400.300	75440.300	-	F 3/8” G	F 1/2” G
Water max 130° C 400 bar - **AISI 304 stainless steel** swivel joint - **Teflon®** seals	75400.350	75440.350	-	F 3/8” G	F 1/2” G
Oil and similar 150 bar - galvanized steel swivel joint - **“polyurethane”** seals	75400.400	-	-	F 1” G	F 1” G
	75400.405	-	-	F 1/2” G	F 1/2” G
Grease 600 bar - **galvanized steel** swivel joint - **“polyurethane”** seals	75400.500	75420.500	-	F 3/8” G	F 1/2” G
Diesel fuel 10 bar - **brass** swivel joint - **Viton®** seals	75400.100	75420.100	-	F 1” G	F 1” G

Note: for special fluids see the compatibility table at page 28 * suitable also for oil ** **AISI 316 stainless steel** swivel joint

HOSE REEL CAPACITY

Ø HOSE EXTERNAL		SERIES 540
1/4”	14 mm	Length max 110 m
3/8”	17 mm	Length max 60 m
1/2”	20 mm	Length max 45 m
5/8”	21 mm	Length max 25 m
3/4”	27 mm	Length max 20 m
1”	34 mm	Length max 15 m

OVERALL DIMENSIONS (mm)

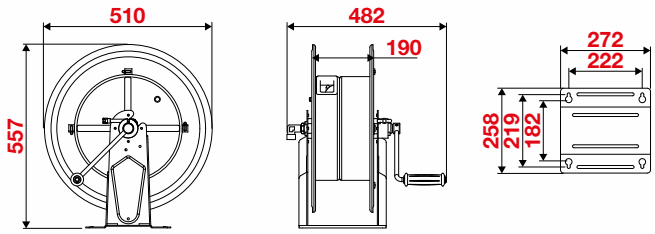

N°1 packing m³ 0,214 kg 21

Hose reel Series 560
MANUAL

Amongst the wall and ceiling installable hose reels types, **the Series 560 is the most spacious.** Regardless of its strength, the simple operation is maintenance free.

Endurance and max capacity

Note: All the hose reels in the table are without hose

	PAINTED STEEL	AISI 304 S. STEEL	AISI 316 S. STEEL	Connection	
	P/N	P/N	P/N	inlet	outlet
Air - Water 20 bar - **brass** swivel joint - **Viton®** seals	75600.100	75620.100	-	F 1" G	F 1" G
	75600.106	75620.106	-	F 1/2" G	F 1/2" G
Water max 130° C 100 bar - **AISI 304 stainless steel** swivel joint - **Viton®** seals	75600.200	75640.200 *	75650.200 **	F 1" G	F 1" G
	75600.206	75640.206 *	-	F 1/2" G	F 1/2" G
Water max 130° C 200 bar - **AISI 304 stainless steel** swivel joint - **Viton®** seals	75600.300	75640.300	-	F 3/8" G	F 1/2" G
Water max 130° C 400 bar - **AISI 304 stainless steel** swivel joint - **Teflon®** seals	75600.350	75640.350	-	F 3/8" G	F 1/2" G
Oil and similar 150 bar - **galvanized steel** swivel joint - **"polyurethane"** seals	75600.400	-	-	F 1" G	F 1" G
	75600.406	-	-	F 1/2" G	F 1/2" G
Grease 600 bar - **galvanized steel** swivel joint - **"polyurethane"** seals	75600.500	75620.500	-	F 3/8" G	F 1/2" G
Diesel fuel 10 bar - **brass** swivel joint - **Viton®** seals	75600.100	75620.100	-	F 1" G	F 1" G

Note: for special fluids see the compatibility table at page 28 * suitable also for oil ** **AISI 316 stainless steel** swivel joint

HOSE REEL CAPACITY

Ø HOSE EXTERNAL		SERIES 560
1/4"	14 mm	Length max 200 m
3/8"	17 mm	Length max 120 m
1/2"	20 mm	Length max 85 m
5/8"	21 mm	Length max 60 m
3/4"	27 mm	Length max 45 m
1"	34 mm	Length max 30 m

OVERALL DIMENSIONS (mm)

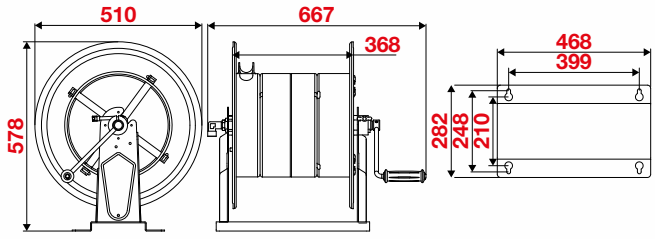

N°1 packing m³ 0,264 kg 39

Pesticides Treatments

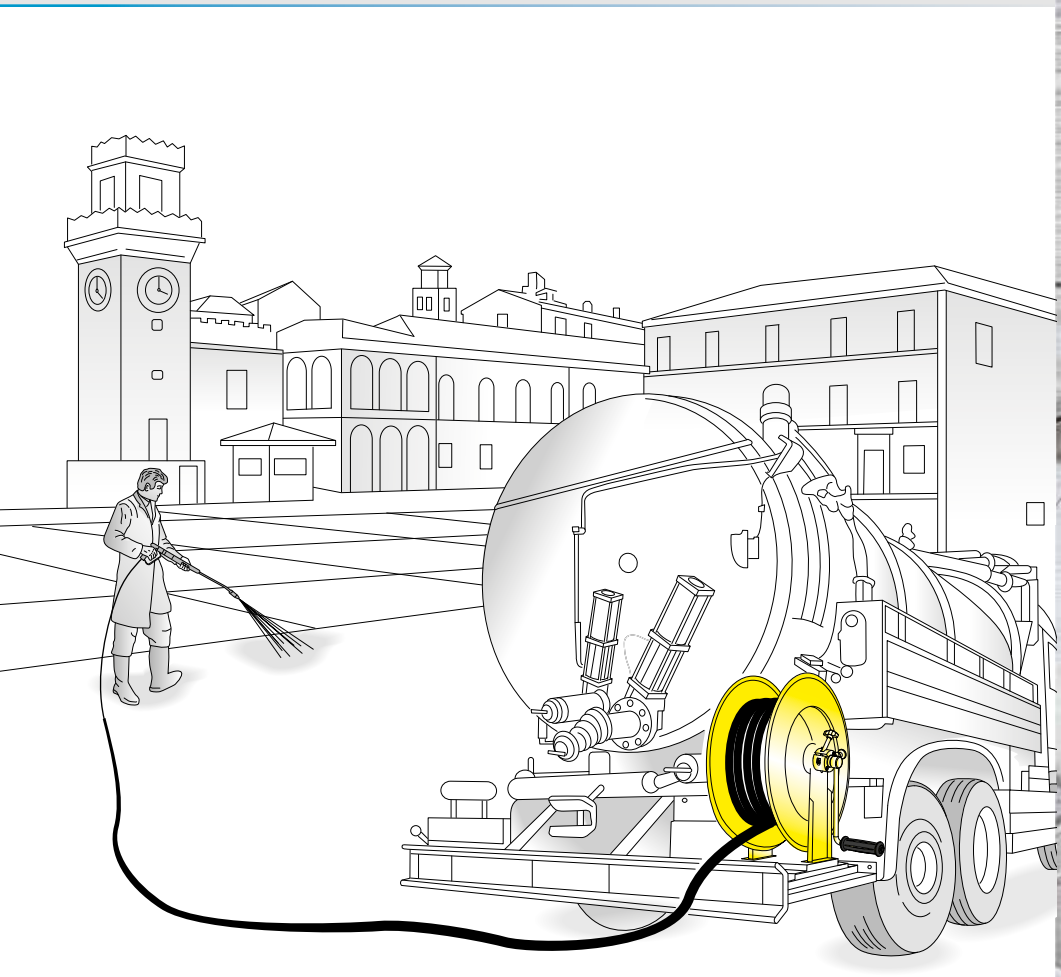

Roads Cleaning

ADVANCED FLUID
MANAGEMENT SOLUTIONS

APPLICATION FIELDS

Agricultural pesticides treatments or roads cleaning are only two examples of the many uses that can be achieved with the Series 430-530-540 and 560 manual hose reels. Other sectors where they can be utilized are:

- **industries**
- **artisan businesses**
- **automotive sector**
- **pool washing**
- **basements**
- **...and many more**

Series 500
TECHNICAL **CHARACTERISTICS**

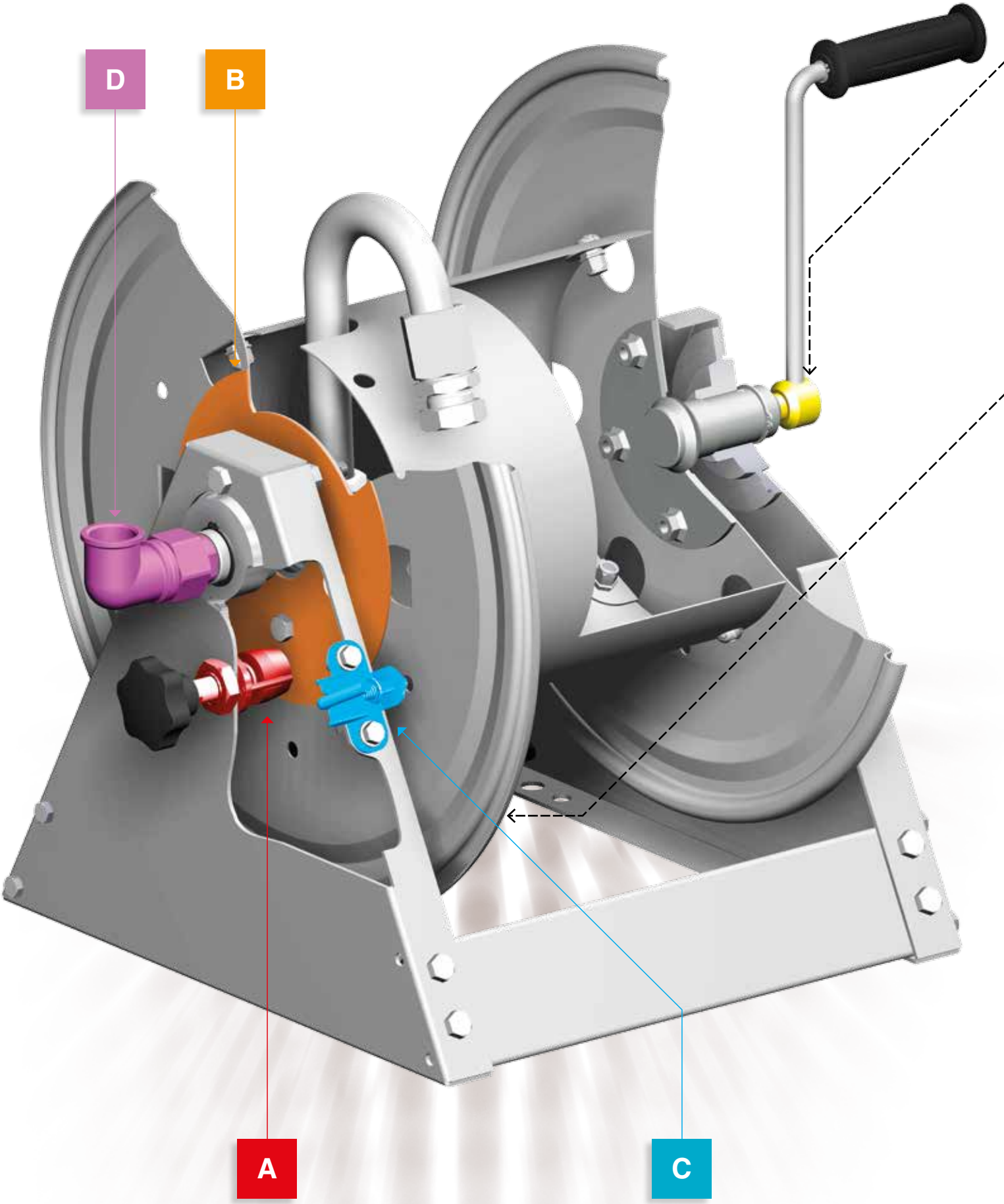

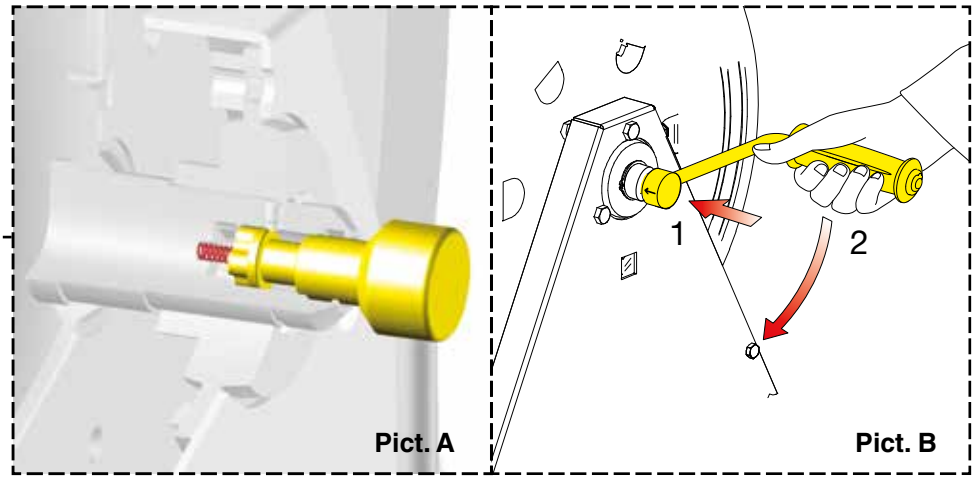

SECURITY SYSTEM

The hose reel is designed with a special, new security system that allows the handle to stay in place, preventing rotation during the manual hose-unwinding phase (Picture A).

To rewind the hose, use the handle as follows (Picture B):

1 press on the knob that connects the handle to the drum

2 turn handle clockwise

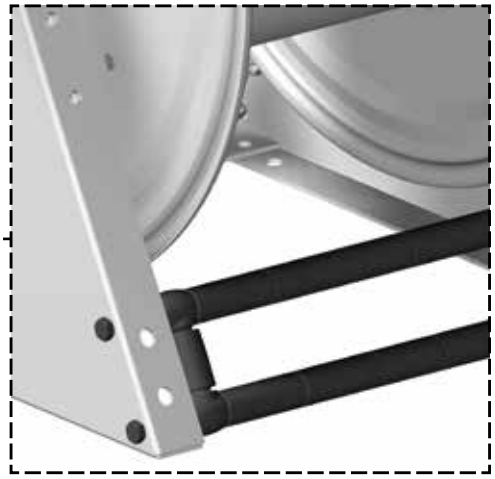

HOSE GUIDE WITH ROLLERS

Hose guide with rollers that ensure easy sliding of the hose during unwinding and rewinding.

A

CLUTCH IN POM

The clutch in POM (to be used only during unwinding), creates the necessary friction for regulating hose unwinding speed.

B

BREAKING DISK

Stainless steel disk where the clutch acts.

C

ROTATION LOCK

Manually lock for the drum rotation.

D

SWIVEL JOINT

Designed with the ideal internal dimensions to guarantee the most possible flow. It is realized, depending on the model, in brass, galvanized steel and AISI 304 stainless steel, with seals in Polyurethane or Viton®.

HOSE REEL INSTALLATION

Bench and/or floor application

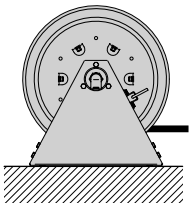

Installation is a very important phase for the safe use of the hose reel, thus we recommend following the installation procedure included in the instruction manual.

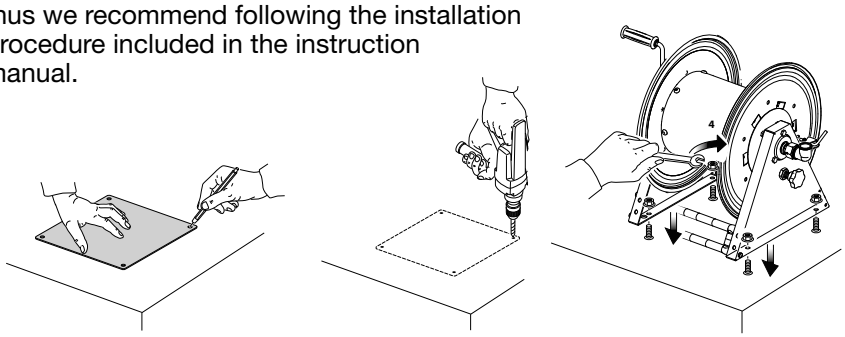

Hose reel Series 500
MANUAL

The Series 500 hose reels are a practical and simple solution for the handling of hoses of a substantial length. Because of their simple operation, ordinary maintenance is not required. Build with high quality materials and with a sturdy structure, these hose reels are a great and economical alternative to spring operated hose reels even with considerable hose lengths.

PAINTED STEEL

Convenience and high capacity

Note: All the hose reels in the table are without hose	width 240 mm	width 320 mm	width 460 mm	width 600 mm	Connection inlet	Connection outlet
Air - Water 20 bar - **brass** swivel joint - **Viton®** seals	7522001.100	7532001.100	7552001.100	7562001.100	F 1"G	F 1" G
	7522001.150	7532001.150	7552001.150	7562001.150	F 1/2" G	F 1/2" G
Water max 130° C 100 bar - **AISI 304 stainless steel** swivel joint - **Viton®** seals	7522001.200	7532001.200	7552001.200	7562001.200	F 1" G	F 1" G
	7522001.250	7532001.250	7552001.250	7562001.250	F 1/2" G	F 1/2" G
Water max 130° C 200 bar - **AISI 304 stainless steel** swivel joint - **Viton®** seals	7522001.300	7532001.300	7552001.300	7562001.300	F 3/8" G	F 1/2" G
Oil and similar 150 bar - **galvanized steel** swivel joint - **"polyurethane"** seals	7522001.400	7532001.400	7552001.400	7562001.400	F 1" G	F 1" G
	7522001.450	7532001.450	7552001.450	7562001.450	F 1/2" G	F 1/2" G
Diesel fuel 10 bar - **brass** swivel joint - **Viton®** seals	7522001.100	7532001.100	7552001.100	7562001.100	F 1" G	F 1" G

Note: for special fluids see the compatibility table at page 28

HOSE REEL CAPACITY

Ø HOSE EXTERNAL		L240	L320	L460	L600
1/4"	14 mm	100 m	150 m	220 m	300 m
3/8"	17 mm	50 m	80 m	120 m	160 m
1/2"	20 mm	40 m	70 m	105 m	140 m
3/4"	27 mm	25 m	40 m	60 m	80 m
1"	34 mm	20 m	30 m	45 m	60 m

OVERALL DIMENSIONS (mm)

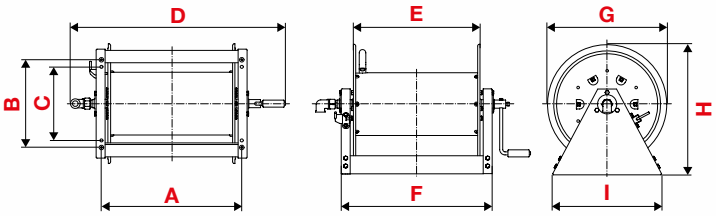

P/N	A	B	C	D	E	F	G	H	I	1-m³	Kg
L240	297	373	313	631	242	342	510	555	468	0,208	25,2
L320	377	373	313	711	322	422	510	555	468	0,243	26,8
L460	517	373	313	851	462	562	510	555	468	0,304	29,3
L600	657	373	313	991	602	702	510	555	468	0,365	31,9

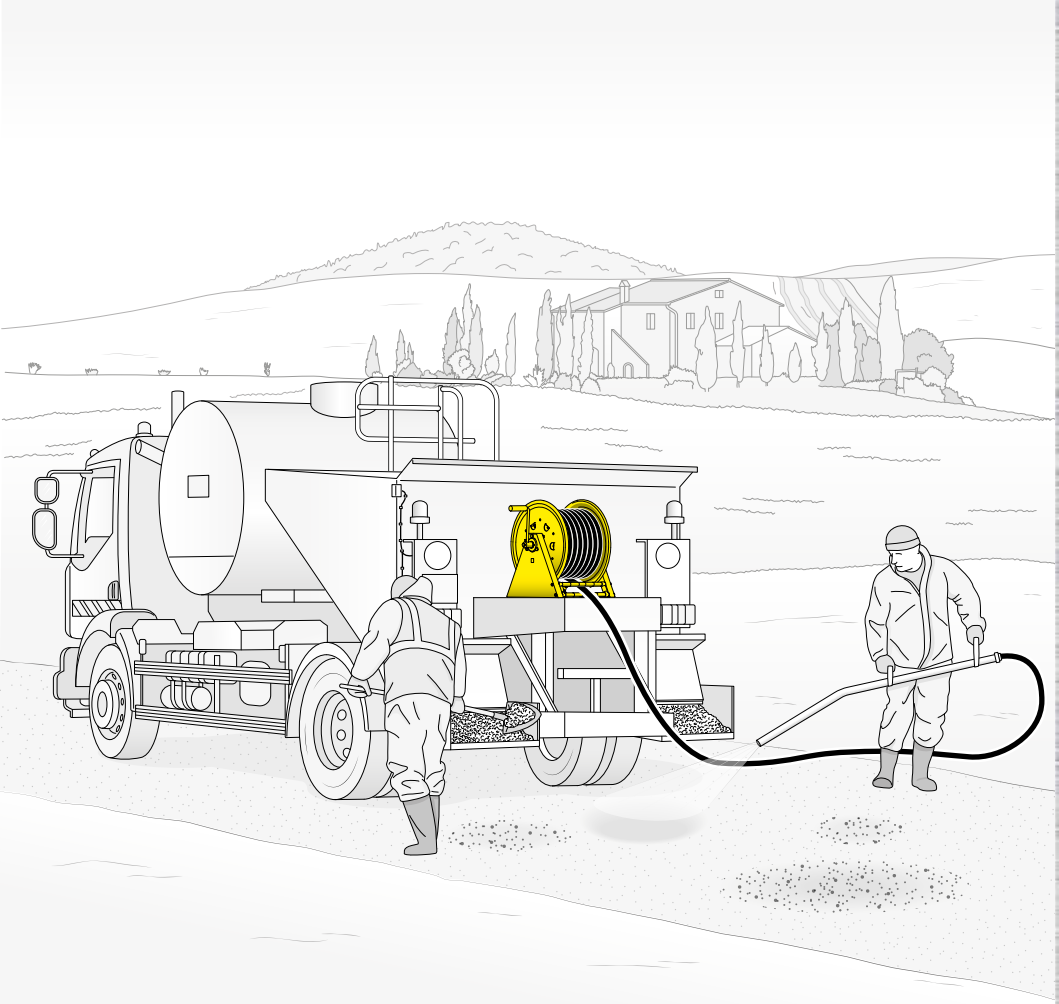

Roads adhesive

Construction Sites

ADVANCED FLUID
MANAGEMENT SOLUTIONS

APPLICATION FIELDS

Thanks to their sturdiness, the Series 500 hose reels are ideal for heavy work contexts as **road maintenance and construction sites.** They can also be employed in:

- **agricolture**
- **mines**
- **refineries**
- **aeronautics**
- **shipyards and**

...and many more

Series 700
TECHNICAL **CHARACTERISTICS**

SHIFTING THE HANDLE WITH CLUTCH
If required by hose reel use, the handle and clutch can be shifted from the standard position (Pict. A) indicated above, to the position shown in the figure opposite (Pict. B), by means of two simple operations.

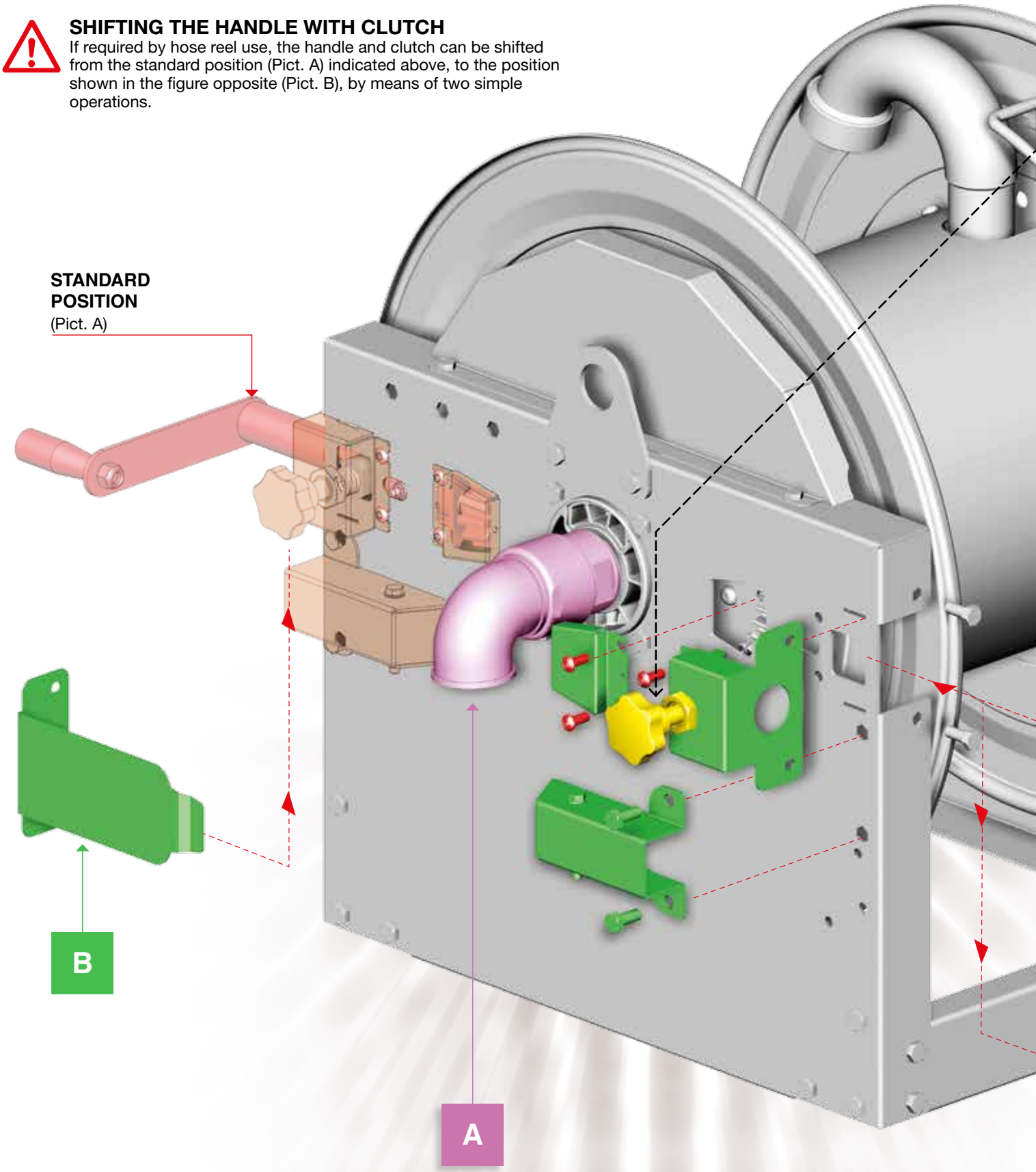

A **SWIVEL JOINT**
Designed with the ideal internal dimensions to guarantee the most possible flow.
It is realized in galvanized steel or aluminium with seals in Viton®.

B **HOLE COVER**

POSITION OF HANDLE WITH CLUTH

The clutch is indispensable for regulating the hose unwinding speed and preventing the drum from turning empty due to inertia. The hose reel comes with the winding handle and clutch in the standard position (Pict. A).

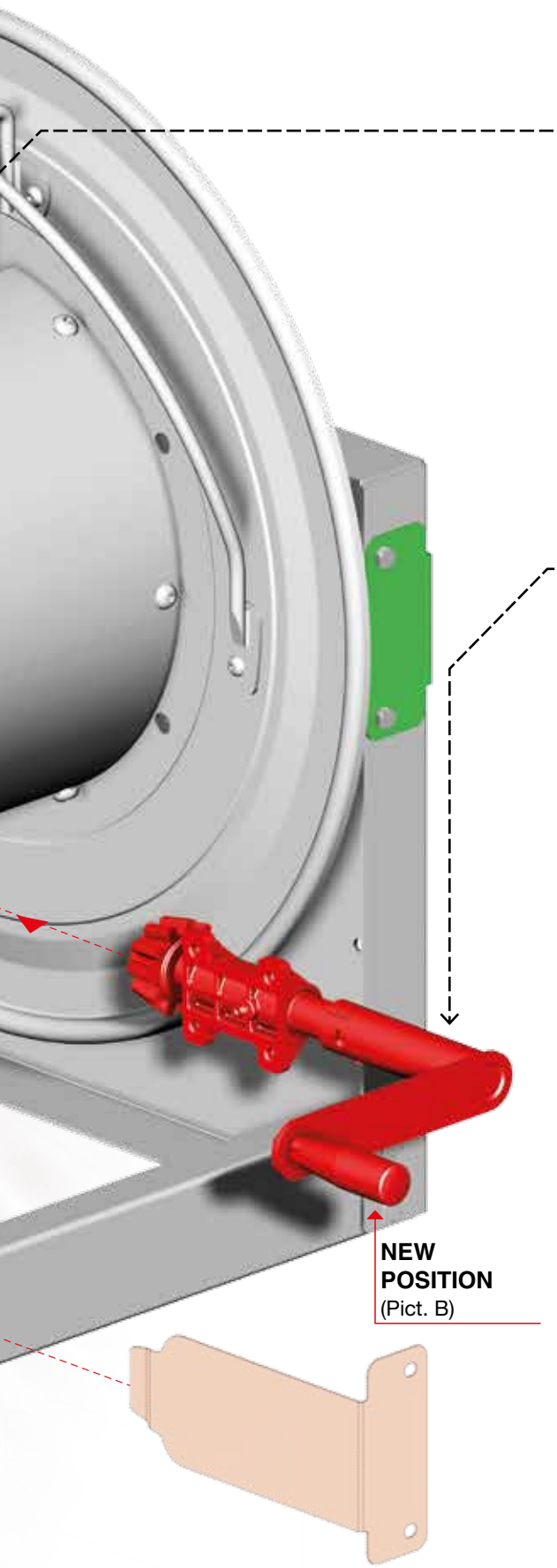

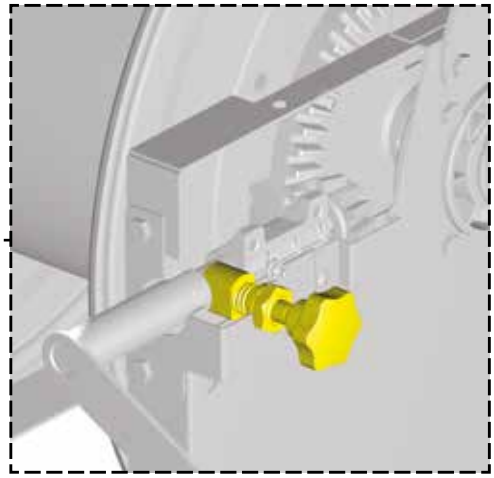

CLUTCH IN POM

The clutch in POM, which acts on the handle (to be used only during unwinding), creates the necessary friction on the pinion, for regulating hose unwinding speed.

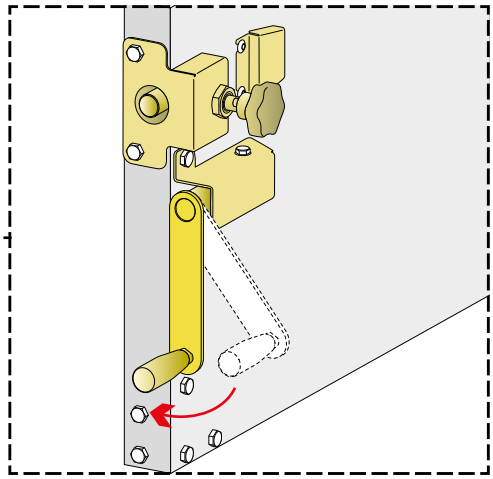

The practical handle, connected to the external rack allows easy winding of the hose at the same time controlling its positioning
on the drum.
There is also an easy allocation where the handle can be stored during the un-winding operation.

BENCH AND/OR FLOOR APPLICATION

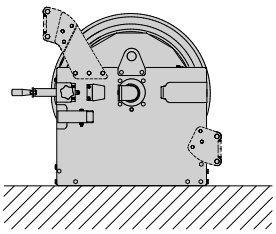

Installation is a very important operation for the safe use of the hose reel, thus we recommend following the installation procedure included in the instruction manual.

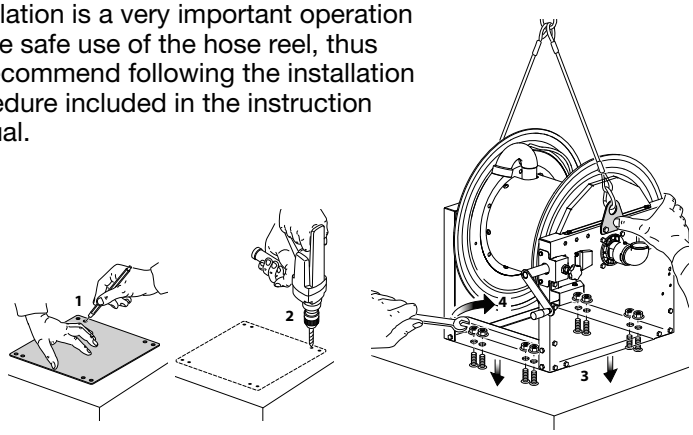

Hose reel Series 700
MANUAL

The manual hose reels Series 700, is able to combine the strength of a product suitable for winding hoses up to 2” with the easiness of winding them utilizing a handle.

PAINTED STEEL

Convenience and capacity for hoses up to 2”

In accordance with directive **Atex 94/9 II 3GD c TX**

Note: All the hose reels in the table are without hose	width 270 mm	width 410 mm	width 550 mm	width 690 mm	Connection	
					inlet	outlet
Air - Water Diesel fuel 20 bar - **aluminium** swivel joint - **Viton®** seals	7721001.100	7741001.100	7751001.100	7771001.100	F 2” G	F 2” G
Oil and similar 70 bar - **galvanized steel** swivel joint - **Viton®** seals	7721001.400	7741001.400	7751001.400	7771001.400	F 2” G	F 2” G

Note: for special fluids see the compatibility table at page 28

HOSE REEL CAPACITY

Ø HOSE EXTERNAL		270 mm	410 mm	550 mm	690 mm
3/8”	17 mm	160 m	300 m	410 m	530 m
1/2”	20 mm	115 m	220 m	300 m	410 m
3/4”	27 mm	70 m	130 m	190 m	240 m
1”	34 mm	30 m	65 m	100 m	130 m
1.1/4”	42 mm	20 m	45 m	65 m	85 m
1.1/2”	50 mm	15 m	40 m	55 m	75 m
2”	63 mm	10 m	20 m	35 m	45 m

OVERALL DIMENSIONS (mm)

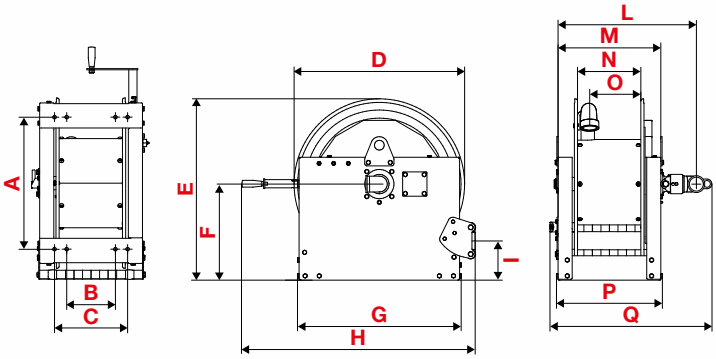

P/N	A	B	C	D	E	F	G	H	I	L	M	N	O	P	Q	1-m³	Kg
270 mm	542	200	300	700	760	410	672	920	160	570	422	260	210	435	640	0,53	85
410 mm	542	340	440	700	760	410	672	920	160	712	562	398	350	575	735	0,63	96
550 mm	542	480	580	700	760	410	672	920	160	850	705	538	490	717	875	0,73	103
690 mm	542	620	720	700	760	410	672	920	160	990	842	680	630	855	1060	0,82	119

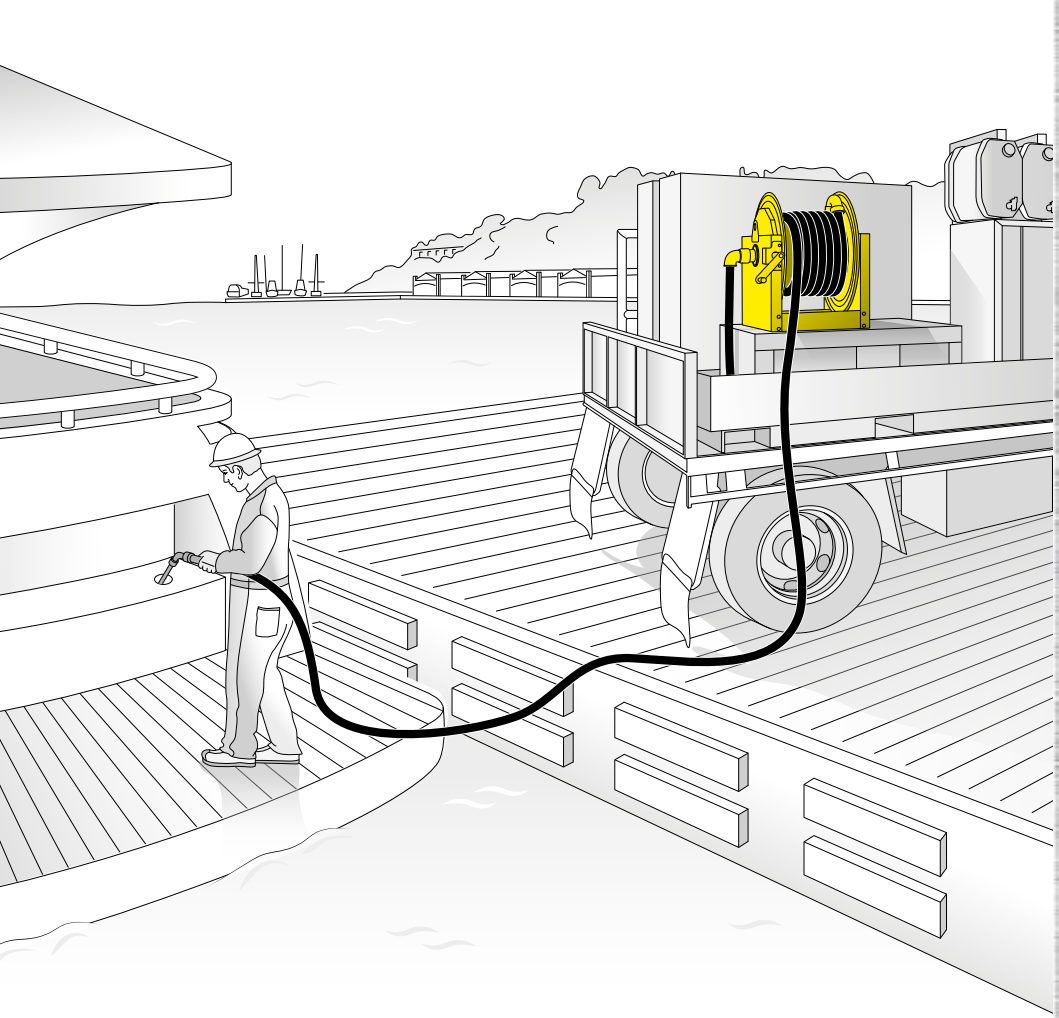

Boats refueling

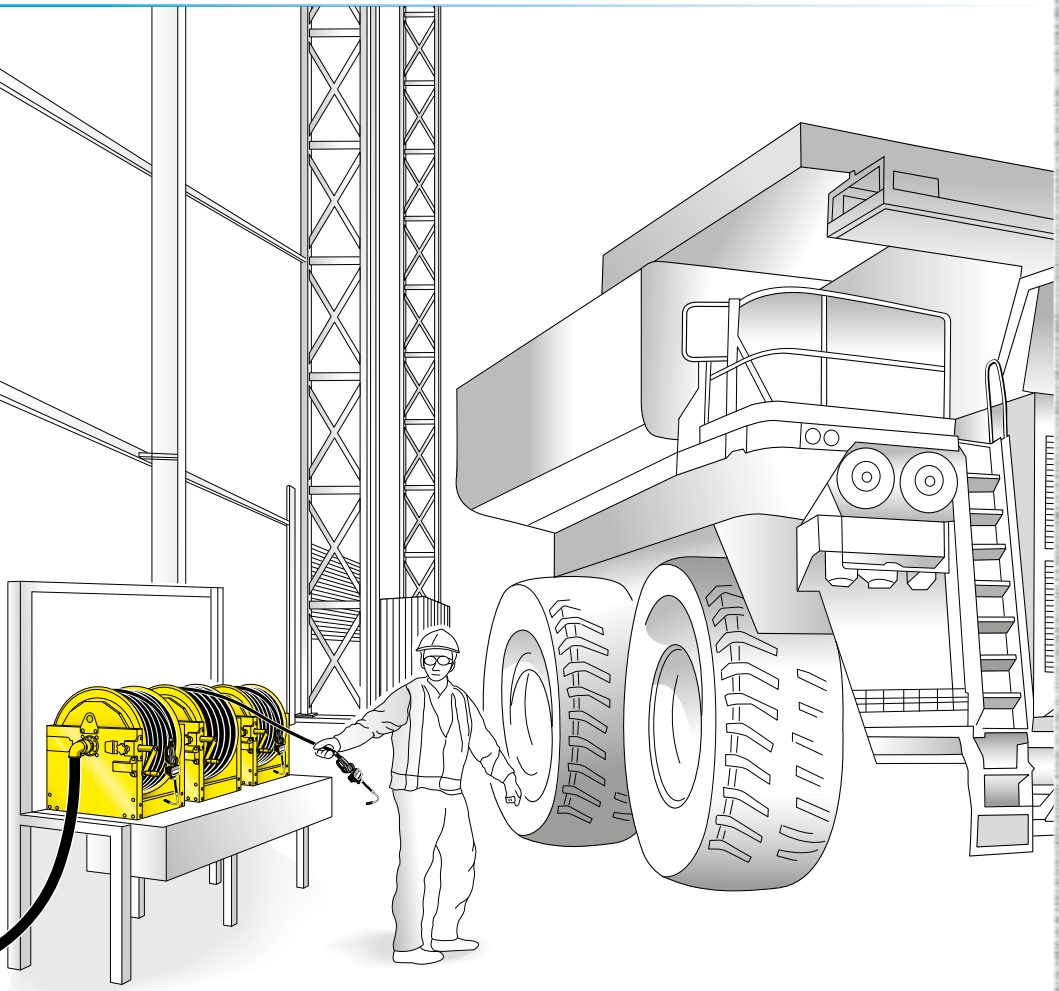

Oil distribution

ADVANCED FLUID
MANAGEMENT SOLUTIONS

APPLICATION FIELDS

The maximized capacity offered by the hose reels Series 700 manual makes them suitable for work applications that require expansive lengths like **boats refuleling in ports or oil distribution in large construction sites.**
Furthermore, these hose reels can also be utilized in:

- **heavy industry**
- **mine**
- **offshore platforms**
- **airports**
- **naval shipyards**

...and many more

Accessories Series 430-530-540-560

quick fit wall brackets supplied on request

P/N **843001**

P/N **843002**

P/N **853001**

P/N **853002**

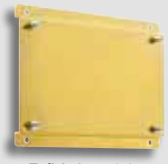
P/N **854001**

P/N **854002**

P/N **856001**

P/N **856002**

P/N **843001**
Fixed support in steel
for fixed hose reels in painted steel
series 430 and 430 ABS

P/N **843002**
Fixed support in AISI 304 stainless steel
for fixed hose reels in stainless steel and Aisi 304
series 430 and 430 ABS

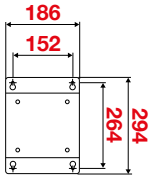

P/N **853001**
Fixed support in steel
for fixed hose reels in painted steel series 530

P/N **853002**
Fixed support in AISI 304 stainless steel
for fixed hose reels in stainless steel and Aisi 304
series 530

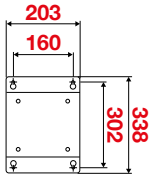

P/N **854001**
Fixed support in steel
for fixed hose reels in painted steel series 540

P/N **854002**
Fixed support in AISI 304 stainless steel
for fixed hose reels in stainless steel and Aisi 304
series 540

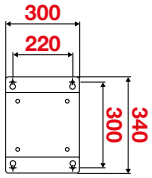

P/N **856001**
Fixed support in steel
for fixed hose reels in painted steel series 560

P/N **856002**
Fixed support in AISI 304 stainless steel
for fixed hose reels in stainless steel and Aisi 304
series 560

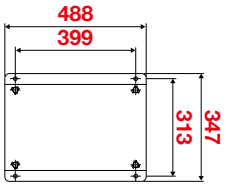

P/N **88650**
Latch mechanism protective cover
rack side for hose reels series 430

P/N **88651**
Latch mechanism protective cover
rack side for hose reels
series 530 - 540 - 560

P/N **74301**
AISI 304 stainless steel rotation lock
for painted steel hose reel and
AISI 304 stainless steel
series 430 - 430 ABS - 530 - 540 - 560

The **quick coupling support**
that facilitates hooking of the
single hose reel and optimises its installation
in battery (i.e. with several hose reels
side by side) is available by request

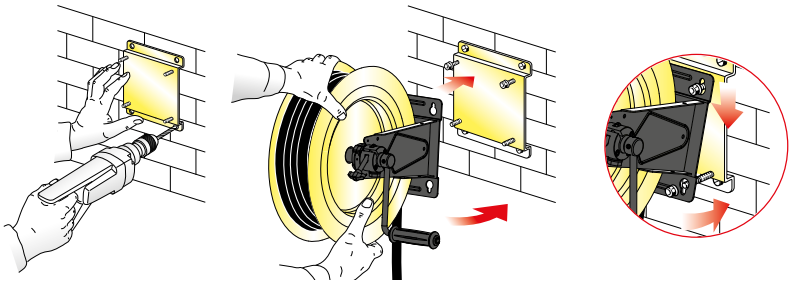

Accessories Series 700

on request

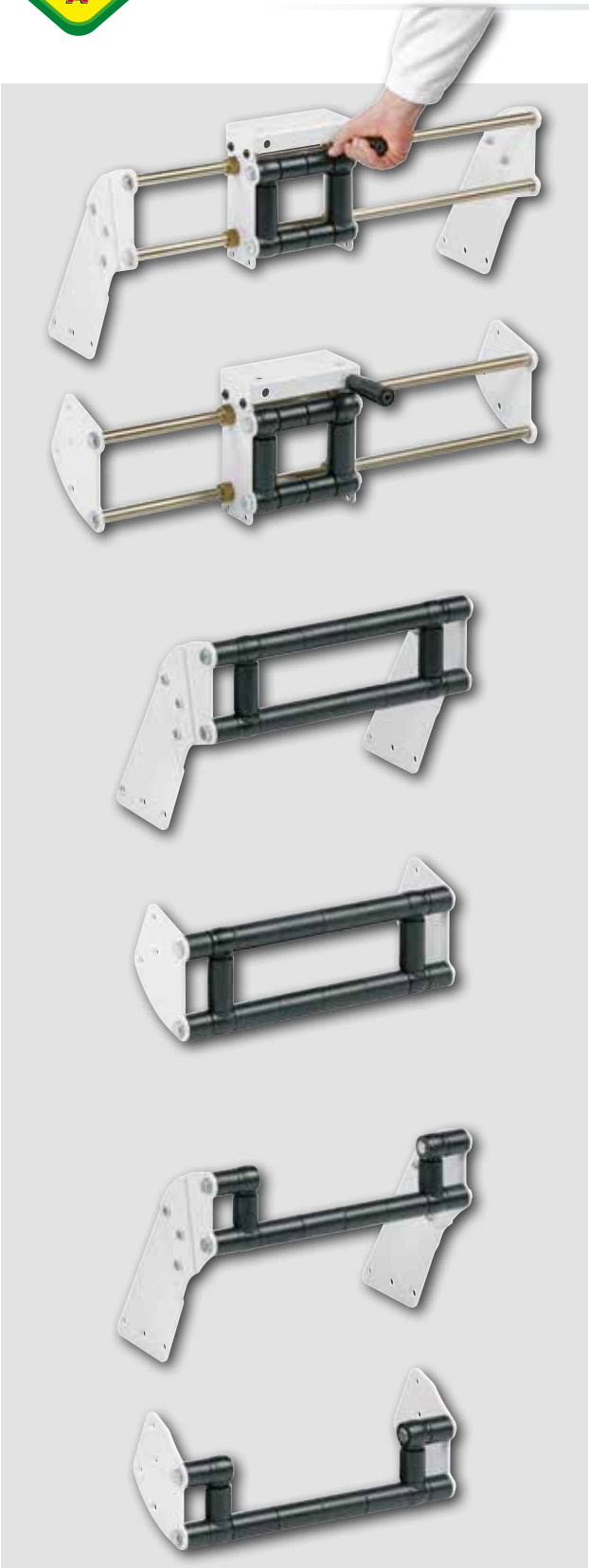

Manual operation
hose guide, high

P/N **77/22775B** for width 270 mm
P/N **77/24175B** for width 410 mm
P/N **77/25575B** for width 550 mm
P/N **77/26975B** for width 690 mm

Using the special knob, the operator shifts the hose to the right or left to ensure its correct rewinding.

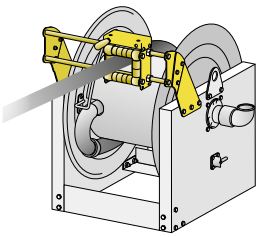

Manual operation
hose guide, low

P/N **77/22775** for width 270 mm
P/N **77/24175** for width 410 mm
P/N **77/25575** for width 550 mm
P/N **77/26975** for width 690 mm

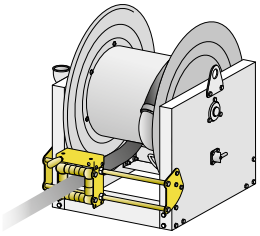

Hose guide
standard closed, high

P/N **77/12775B** for width 270 mm
P/N **77/14175B** for width 410 mm
P/N **77/15575B** for width 550 mm
P/N **77/16975B** for width 690 mm

Hose guide with rollers that ensure easy sliding of the hose during unwinding and rewinding.

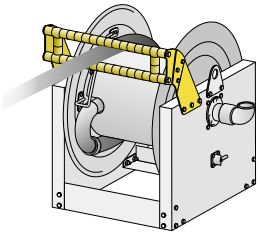

Hose guide
standard closed, low

P/N **77/12775** for width 270 mm
P/N **77/14175** for width 410 mm
P/N **77/15575** for width 550 mm
P/N **77/16975** for width 690 mm

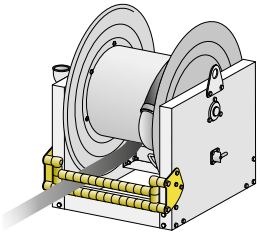

Hose guide
standard open, high

P/N **77/32775B** for width 270 mm
P/N **77/34175B** for width 410 mm
P/N **77/35575B** for width 550 mm
P/N **77/36975B** for width 690 mm

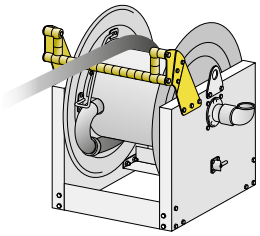

Hose guide
standard open, low

P/N **77/32775** for width 270 mm
P/N **77/34175** for width 410 mm
P/N **77/35575** for width 550 mm
P/N **77/36975** for width 690 mm

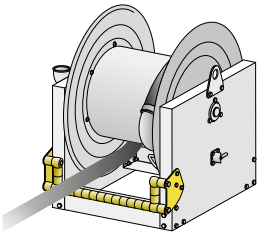

Hose guide, standard open high or low.
This type of hose guide enables fitting of both versions (high and low) on the same hose reel, allowing hose unwinding in two opposite directions.

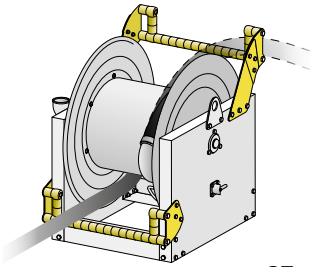

Chemical compatibility

The information given in the following tables was obtained from various sources which, for competence and technical knowledge, we deem reliable. These data is not the result of tests carried out by us, but should be regarded only as a guide to be used for determining the suitability of the various pump parts in contact with the fluid.

RAASM declines all liability for any inaccuracies contained in the following tables due to printing, transcription or appraisal errors and, in case of no previous experience confirming suitability, recommends the practical testing of the materials that will come into contact with the fluids to be pumped.

Fluids	Materials							
	Galvanized steel	AISI 304 stainless steel	AISI 316 stainless steel	Brass	Polyurethane	Viton®	Teflon®	NBR
Acetate solvent	-	A	A	-	D	D	A	D
Acetic acid	A	A	A	D	C	C	A	C
Acetic acid, glacial	A	A	-	D	C	D	A	D
Acetone	A	A	A	D	D	D	A	D
Acetyl chloride (dry)	-	B	B	B	D	B	A	D
Acetylene	A	A	A	-	D	A	A	A
Adipic acid	-	B	B	-	-	A	A	B
Alcohols: ethyl	A	A	A	B	D	A	A	A
Alcohols: methyl	A	A	A	-	D	D	A	A
Ammonia (10%)	-	-	A	D	D	D	A	A
Ammonia, anhydrous	-	-	A2	D	D	D	A	B
Ammonia, liquid	-	-	A2	D	B	D	A	B
Ammonium bifluoride	-	-	A	-	-	A	A	A
Ammonium carbonate	B	B	A	-	-	B	A	D
Ammonium chloride	D	C	C	D	A	A	A	A
Ammonium hyposulfite	-	A	A	D	-	-	A	A
Ammonium nitrate	D	A	A	-	D	-	-	A
Ammonium oxalate	A	A	A	-	-	-	A	A
Ammonium persulfate	A	A	A	-	D	A	A	D
Ammonium phosphate dibasic	-	-	A	D	-	A	A	A
Ammonium phosphate monobasic	A	-	A	D	-	A	A	A
Ammonium phosphate tribasic	A	-	A	D	-	A	A	A

A ▸ excellent compatibility
B ▸ good compatibility
C ▸ poor compatibility, not recommended
D ▸ no compatibility, not recommended
1 ▸ satisfactory up to 22°c
2 ▸ satisfactory up to 48°c
- ▸ not available

Chemical compatibility

Fluids	Materials							
	Galvanized steel	AISI 304 stainless steel	AISI 316 stainless steel	Brass	Polyurethane	Viton®	Teflon®	NBR
Ammonium sulfate	C	A	A	D	A	D	A	A
Animal oil	-	-	A	A	-	A	A	A
Antifreeze	A	A	A	A	-	A	A	A
Aqua regia (80% hci, 20% hno3)	-	-	D	-	D	C	A	D
Aromatic hydrocarbons	-	A	A	-	D	A	A	D
Arsenic acid	D	A	A	D	C	A	A	A
Benzene	D	A	A	A	D	A	A	D
Benzoic acid	-	B	A	B	D	A	A	D
Bitume	D	-	A	-	D	A	A	D
Bleach	D	A	B	D	D	A	A	D
Bleach solution	-	-	-	-	-	A	A	D
Boric acid	-	A	A	D	A	A	A	A
Brake fluid	A	A	A	A	D	D	A	D
Bromidie acid 100%	D	D	D	D	D	-	A	D
Butane	-	A	A2	-	A	A	A	A
Butanol	-	A	A1	-	D	A	A2	A
Butyric acid	-	B	A	-	-	-	A	D
Calcium bisulfide	-	B	B	-	A	A	-	A
Calcium carbonate	-	A	A	D	-	A	A	A
Calcium chloride	-	C	C	D	A	A	A	A
Calcium hydroxide	-	A	A	C	A	A	A	A
Calcium hypochlorite	-	A	A	C	D	A	A	B
Calcium nitrate	-	B	B	-	A	A	A	A
Calcium sulfate	-	A	A	-	-	A	A	A
Carbolic acid (phenol)	-	A	A	C	C	A	A	D
Carbonic acid	-	B	B	C	A	A	A	B
Chlorine (anhydrous liquid)	-	D	B	-	-	A	A	D
Chlorine (dry)	-	D	D	-	D	A	A	C
Chloroacetic acid	-	-	-	-	-	D	-	-
Chlorobenzene	C	B	A	B	D	A	A	D
Chlorobromomethane	-	B	B	-	D	A	A	D

A ▸ excellent compatibility
B ▸ good compatibility
C ▸ poor compatibility, not recommended
D ▸ no compatibility, not recommended
1 ▸ satisfactory up to 22°c
2 ▸ satisfactory up to 48°c
- ▸ not available

Chemical compatibility

Fluids	Materials							
	Galvanized steel	AISI 304 stainless steel	AISI 316 stainless steel	Brass	Polyurethane	Viton®	Teflon®	NBR
Chlorosulfonic acid	D	D	D	D	D	D	A	D
Chromic acid 5%	-	A	A	A	D	A	A	D
Chromic acid 50%	-	B	B	D	D	A	A	D
Citric acid	D	A	A2	D	A	A	A	A
Copper chloride	-	D	D	D	A	A	A	A
Copper nitrate	-	A	A	-	-	A	A	A
Cresylic acid	-	A	A	-	D	A	A	D
Deionized water	-	-	A2	-	-	A1	A2	A1
Diesel fuel	A	A	A	A	B	A	A	A
Dyes	-	-	A	-	-	A	-	-
Engine oil	A	A	A2	A	A	A	A	A
Ethyl acetate	C	A	A	A	D	D	A	D
Ethyl chloride	D	A	A	-	C	A	A	A
Ethyl sulfate	-	D	D	-	-	A	A	A
Fatty acids	-	-	A	-	-	A	A	B
Ferric chloride	-	D	D	D	D	A	A	B
Ferrous chloride	-	D	D	D	D	A	A	A
Fluoboric acid	-	B	B	D	-	A	A	B
Fluosilicic acid	-	B	B	D	B	A	A	A
Fluosilicidric acid 20%	-	D	D	D	B	A	A	B
Formic acid	D	A	A	D	D	B	A	D
Freon 113	-	A	A	-	B	C	A	A
Freon 12	-	A	A	A	A	A	A	A
Freon 22	-	A	A	-	D	D	A	D
Freon tf	-	A	A	-	A	-	A	A
Fresh water	D	A	A	B	A	B	A	A
Fuel oil	-	-	A	B	B	A	A	A
Gallic acid	D	B	B	-	D	A	A	D
Gasoline (high-aromatic)	A	A	A	A	D	A	A	C
Gasoline, leaded	A	A	A2	A	C	A	A	A2
Gasoline, uleaded	A	A	A2	A	D	A	A	A

A ▸ excellent compatibility
B ▸ good compatibility
C ▸ poor compatibility, not recommended
D ▸ no compatibility, not recommended
1 ▸ satisfactory up to 22°c
2 ▸ satisfactory up to 48°c
- ▸ not available

Chemical compatibility

Fluids	Materials							
	Galvanized steel	AISI 304 stainless steel	AISI 316 stainless steel	Brass	Polyurethane	Viton®	Teflon®	NBR
Glue (p.V.A.)	A	A	A2	-	A	A	A	D
Glycerin	-	A	A	A	A	A	A	A
Glycolic acid	-	-	-	-	-	A	A	A
Grease	A	A	A	A	A	A	A	A
Hydraulic oil (petro)	A	A	A	A	A	A	A	A
Hydraulic oil (synthetic)	A	A	A	A	-	A	A	C
Hydrchloric acid (20%)	-	D	D	D	B	A	A	C
Hydrchloric Acid (37% cold)	-	D	D	D	C	A	A	C
Hydrchloric acid (37% - hot)	-	D	D	D	C	A	A	D
Hydrocianic acid	-	A	A	-	-	D	A	C
Hydrofluoric acid (concentrated)	-	D	D	D	D	A	A	D
Hydrofluoric acid 20%	-	D	D	D	-	A	A	D
Hydrofluoric acid 50%	-	D	D	D	D	A	A	D
Hydrofluoric acid 75%	-	D	D	D	-	A	A	D
Hydrogen (gas)	-	-	A	D	A	A	A	A
Hydrogen peroxide	D	A	A	D	C	A	A	B
Hydroxyacetic acid 70%	-	B	-	-	-	A	A	A
Ink	-	A	A	-	-	A	-	A
Isooctane	-	A	-	A	-	A	-	A
Jet fuel	A	A	A	A	C	A	A	A
Kerosene	A	A	A	A	C	A	A	A
Lactic acid	D	A	A	B	-	A	A	B
Latex	-	A	A2	-	-	A	A	A
Lime	-	-	A	-	-	A	A1	A
Linoleic acid	-	A	A	-	-	A	A	B
Magneium nitrate	-	A	A	-	-	A	A	A
Magnesium carbonate	-	A	A	-	-	-	A	A
Magnesium chloride	C	D	D	-	A	A	A	A
Magnesium hydroxide	B	A	A	B	A	A	A	B
Magnesium oxide	-	A	A	-	-	A	A	A
Magnesium sulfate	B	A	A	-	-	A	A	A

A ▸ excellent compatibility
B ▸ good compatibility
C ▸ poor compatibility, not recommended
D ▸ no compatibility, not recommended
1 ▸ satisfactory up to 22°c
2 ▸ satisfactory up to 48°c
- ▸ not available

Chemical compatibility

Fluids	Materials							
	Galvanized steel	AISI 304 stainless steel	AISI 316 stainless steel	Brass	Polyurethane	Viton®	Teflon®	NBR
Maleic acid	B	A	A	D	-	A	A	D
Malic acid	-	A	A	D	-	A	A	B
Mercury	-	A	A	D	A	A	A	A
Mercury chloride (dilute)	-	-	D	D	-	A	A	A
Mercury cyanide	-	B	A	D	-	A1	A	A
Methane	A	A	A	B	B	A	A	A
Methanol	-	A	A	B	D	C	A	A
Methyl acetone	A	A	A	-	D	D	A	D
Methyl acrylate	-	A	-	B	-	D	A	D
Methyl bromide	-	A	-	-	-	A	A	B
Methyl chloride	-	A	A	-	D	A	A	D
Methyl dichloride	-	-	-	-	D	A	A	D
Methyl ethyl ketone	-	A	A	-	D	D	A	D
Methyl methacrylate	-	A	-	-	-	D	A	D
Mine ragia water	-	-	A	A	-	A	A	A
Mine water	D	A	B	B	A	A	A	A
Naphta	-	-	A	B	C	A	A	B
Naphtalene	-	-	B	B	B	A	A	D
Nitric acid (20%)	D	A	A	D	C	A	A	D
Nitric acid (50%)	D	A	A	D	C	A	A	D
Nitric acid (5-10%)	D	A	A	D	C	A	A	D
Nitric acid (concentrated)	D	A	A	D	D	A	A	D
Oils: diesel fuel (20,30,40,50)	-	-	A	B	-	A	A	A
Oils: fuel (1,2,3,4,5,6)	-	-	A	B	-	B	A	B
Oils: mineral	A	A	A	A	A	A	A	A
Oils: transformer	A	A	A	-	-	A	A	A
Oils: turbine	A	A	A	-	B	B	A	B
Oleic acid	C	A	A	-	B	B	A	B
Paint thinner	-	-	-	-	-	B1	A2	B
Palmitic acid	-	A	A	D	A	A	A	A
Perchloric acid	-	-	D	-	D	A	A	D

A ▸ excellent compatibility
B ▸ good compatibility
C ▸ poor compatibility, not recommended
D ▸ no compatibility, not recommended
1 ▸ satisfactory up to 22°c
2 ▸ satisfactory up to 48°c
- ▸ not available

Chemical compatibility

Fluids	Materials							
	Galvanized steel	AISI 304 stainless steel	AISI 316 stainless steel	Brass	Polyurethane	Viton®	Teflon®	NBR
Petroleum	-	A	A	A	-	A2	A2	A2
Petroleum jelly	-	A	A	-	-	A	C	A
Phosphoric acid (<40%)	-	B	A	D	B	A	A	D
Phosphoric acid (>40%)	-	B	B	D	C	A	A	D
Picric acid	-	D	D	D	B	A	A	B
Potassium bicarbonate	-	B	B	-	-	A	A	A
Potassium bromide	D	A	A	-	-	A	A	A
Potassium chlorate	-	A	A	-	-	A	A	A
Potassium chloride	B	C	C	D	A	A	A	A
Potassium chromate	-	B	B	-	-	A	A	A
Potassium cyanide solutions	B	A	A	D	A	A	A	A
Potassium dichromate	C	A	-	D	-	-	-	-
Potassium hydroxide (caustic potash)	-	A	A	-	B	D	A	B
Potassium nitrate	-	B	A	B	A	A	A	A
Potassium permanganate	-	B	B	-	-	A	A	A
Potassium sulfate	B	B	B	B	A	A	A	A
Propane (liquefied)	-	A	A	A	B	A	A	A
Pyrogallic acid	-	A	A	-	-	A	A	D
Rosin	D	A	A1	-	-	A	A	A2
Rust inhibitors	-	-	A	-	-	A	-	A
Salt water	-	C	C	A	A	A	A	A
Sea water	-	C	C	A	A	A	A	A2
Sewage (black water)	D	A	A	-	D	A	A	A
Shellac (bleached)	-	A	A	-	-	-	-	A
Shellac (orange)	-	-	A	-	-	-	-	A
Silicone	-	-	A	-	-	A	A	A
Soap solutions	-	A	A1	A	A	A	A	A
Soda ash (sodium carbonate)	-	-	A	D	-	A	A	A1
Sodium aluminate	C	A	A	-	-	A	A	A
Sodium bicarbonate	C	A	A	-	-	A	A	A
Sodium bisulfate	D	A	A	-	-	A	A	A

A ▸ excellent compatibility
B ▸ good compatibility
C ▸ poor compatibility, not recommended
D ▸ no compatibility, not recommended
1 ▸ satisfactory up to 22°c
2 ▸ satisfactory up to 48°c
- ▸ not available

Chemical compatibility

Fluids	Materials							
	Galvanized steel	AISI 304 stainless steel	AISI 316 stainless steel	Brass	Polyurethane	Viton®	Teflon®	NBR
Sodium bisulfite	-	A	A	-	-	A	A	A
Sodium carbonate	B	A	A	B	-	A	A	A
Sodium chlorate	C	A	A	-	-	A	A	A
Sodium chloride	C	C	C	D	A	A	A	A
Sodium chromate	B	A	-	B	-	A	A	A
Sodium cyanide	B	A	A	D	-	A	A	A
Sodium hydroxide (20%)	-	A	A	-	B	A	A	A
Sodium hydroxide (50%)	-	B	B	-	B	A	A	D
Sodium hydroxide (80%)	-	D	D	-	B	B	A	D
Sodium hypochlorite (<20%)	-	C	C	D	D	A	A	D
Sodium metasilicate	C	A	A	-	-	A	A	A
Sodium nitrate	B	A	A	-	-	A	A	C
Sodium perborate	B	C	C	-	-	A	A	B
Sodium peroxide	C	B	A	D	D	A	A	C
Sodium silicate	B	B	A	-	-	A	A	A
Sodium sulfate	B	A	A	-	A	A	A	A
Sodium sulfide	B	A	A	D	A	A	A	A
Sodium tetraborate	-	A	A	-	-	A	A	A
Sodium thiosulfate	-	A	A	-	A	A	A	B
Stannic chloride	D	D	D	D	B	A	A	A
Starch	-	A	A	-	A	A	A	A
Stoddard solvent	A	A	A	A	A	A	A	B
Sulfuric acid (<10%)	-	C	C	D	D	A	A	D
Sulfuric acid (10-75%)	-	C	C	D	D	A	A	D
Sulfuric acid (75-100%)	-	C	B	D	D	A	A	D
Sulfurous acid	D	B	B	D	D	D	A	D
Tannic acid	C	A	A	B	A	A	A	A
Tartaric acid	D	A	A	B	A	A	A	A
Toluene	A	A	A	A	C	A	A	D
Trichloroacetic acid	-	D	D	-	D	B	A	C
Turpentine	B	A	A	B	D	A	A	A

A ▸ excellent compatibility
B ▸ good compatibility
C ▸ poor compatibility, not recommended
D ▸ no compatibility, not recommended
1 ▸ satisfactory up to 22°c
2 ▸ satisfactory up to 48°c
- ▸ not available

Chemical compatibility

Fluids	Materials							
	Galvanized steel	AISI 304 stainless steel	AISI 316 stainless steel	Brass	Polyurethane	Viton®	Teflon®	NBR
Urea	-	B	B	-	-	A	A	B
Urine	-	-	-	-	-	A1	A1	A1
Varnish	-	A	A	A	D	D	A	D
Varnish	-	A	A	A	-	A	A	B
Varnish (xylene based)	A	A	A	A	D	D	A	D
Varnish diluted	-	A	A	A	D	B	A	A
Varnish solvent	-	-	A	-	D	B	A	D
Water, chlorine	-	-	C	-	-	A	A	D
Weed killers	-	-	A	-	-	A	-	A

A ▸ excellent compatibility
B ▸ good compatibility
C ▸ poor compatibility, not recommended
D ▸ no compatibility, not recommended
1 ▸ satisfactory up to 22°c
2 ▸ satisfactory up to 48°c
- ▸ not available

Applications with special fluids

Kind of fluid	Kind of hose reel
Antifreeze	Hose reel air-water 20 bar
Windshield washing liquid	Hose reel air-water 20 bar
Nitrogen	(At room temperature) for tyre inflation, industrial application, hose reel air-water 20 bar
Argon	Hoses with EN559 certification
Propane	Hoses with EN559 certification
Natural gas	Hoses with EN559 certification
Oxygen	Swivel joint with special grease not flammable (special hose for oxygen), ask our technical department for more information
Skydrol	EPDM seals needed and stainless steel passages, ask our technical department for more information

Product customisation

RAASM offers the opportunity to order the products of its production in **4 different colours.** The customer **without the constraints of minimum quantity, nor additional costs, can request the colour choosing from the proposed range.**
This customization concerns only the colour and **does not include:** instruction booklets, labels, brands, etc. **Delivery times for the colour that is not standard may vary.**
Different colours, in addition to those available or other customizations, must be valued each time and will be bound to minimum quantities and additional costs.

AVAILABLE COLOURS

The products for which a customized colour is not specified, are supplied with standard grey colour as per catalogue

STANDARD COLOUR	AVAILABLE COLOUR		
RAL 7035	RAL 1004	RAL 3020	RAL 5002

To order an item with a **different colour from the standard,**
it is necessary to add the suffix:
/**C2** for yellow colour **Ral 1004**
/**C4** for red colour **Ral 3020**
/**C5** for blue colour **Ral 5002**

RAASM products
are present worldwide through a network of
qualified dealers.

www.raasm.com

GENERAL SALES CONDITIONS

FOR FOREIGN MARKETS

The following general sales conditions regulate the sale of goods and services by the company RAASM S.p.A. for customers residing outside the territory of the Italian State.

Art. 1 GOODS DELIVERY TERMS
The goods are delivered ex works RAASM S.p.A.. The subsequent transport / shipment must occur by, in the name and at the expense of the purchasing customer, even by means of carrier designated by the same. All risks arising from loading, subsequent custody and transport are borne entirely by the purchasing customer.

Art. 2 MINIMUM ORDERS
Each order cannot be for less than €. 1,500.00, net of taxes, discounts and rebates. If, at the option of RAASM S.p.A., orders for lower amounts are accepted, an extra charge of €. 155.00 shall be applied for order management administrative expenses.

Art. 3 ACCESSORIES
All the accessories given in the price list are supplied exclusively for fitting to or combining with the items RAASM S.p.A. produces.

Art. 4 COMPLAINTS
Any defects immediately noticed after a brief inspection of the goods (damage, shortages or different product from that ordered) must be notified in writing to our company within 8 (eight) days of receipt the goods. Any defects in the product noticeable only during its use must be notified in writing to RAASM S.p.A. within 8 (eight) days of being detected.
Any returns of goods must be authorized in advance by RAASM S.p.A. and freight charges are at the customer's expenses.

Art. 5 DELIVERY TIMES/TERMS
Delivery times and dates are only approximate and are subject to change. Any delays in delivery do not entitle the customer to cancel the order or claim compensation for damages caused by delay of delivery. Delivery times for urgent orders must be agreed directly by RAASM S.p.A.. RAASM S.p.A. has the right not to carry out the order and/or totally or partially carry it out, without this giving rise to reimbursement or claims for compensation for damage.

Art. 6 PACKS AND PACKAGING
Packaging costs are included in the price, except for special packing, which shall be charged at cost.

Art. 7 PRICES
In the event of changes to our price list and/or individual items, the goods shall be forwarded at the price in force on the day of delivery. The price list and/or the prices of individual items can be changed even without notice, according to the changes in market conditions or technical innovations/modifications made to the product. The prices are understood to be ex works RAASM S.p.A..

Art. 8 PAYMENTS
Payments must be made exclusively to RAASM S.p.A. at the agreed conditions. Under no circumstances will deductions or roundings be accepted. In case of late payment with respect to the agreed conditions, RAASM S.p.A. reserves the right to charge interest at the current rate, effective from the day after that agreed for payment, plus any additional expenses. Discounts conditional on the payment term and already credited shall be recharged.

Art. 9 WARRANTY
RAASM S.p.A. provides each product with the communication of particular instructions for the installation, use and maintenance requirements and the need to carry out possible checks on the product. Incorrect installation, use or maintenance of the product shall void the warranty. The articles must be returned free to our Factory for checking and acceptance. All the technical information and data mentioned in the catalogue and in the price-list in force are not binding and can be changed without prior notice for the purpose of improving the quality of the products.
All products manufactured by RAASM S.p.A. are guaranteed for a period of 1 (one) years. The 5 (five) year guarantee does not apply to components which are subject to normal wear and tear (such as gaskets, membranes, O-rings, hoses, etc), electronic components and items that are sold but not manufactured by RAASM S.p.A. (marked with an asterisk in the current product catalogue) which are guaranteed for 1(one) year.

Art. 10 RESPONSIBILITY
RAASM S.p.A. is exempt from any responsibility and liability for accidents that may occur to persons and property, as a result of or during the use of the equipment, due to or depending on the same whenever the products have been damaged during transport, tampered with or modified, or improperly used, or stored, installed, protected and preserved without complying with the instructions of RAASM S.p.A. as given in the installation, use and maintenance instruction manuals for each product.
RAASM S.p.A. is liable for the value for the supplied product and cannot be held responsible in any way for other possible costs or additional costs that the customer may bear.

Art. 11 COMPETENT LAW COURT
Any disputes shall be settled by the Law Court of Vicenza, Italy.

RAASM

The company RAASM S.p.A. holds the exclusive Intellectual Property rights on the RAASM trademark and all rights to its use and reproduction are reserved.
The RAASM trademark is a registered trademark and is protected at an international level. No part of the RAASM trademark and its logo may be utilized, copied and/or used in any form, time and space, even by means of improper alterations.
The Intellectual Property rights on the images published in this catalogue are owned exclusively by RAASM S.p.A. and any unauthorized reproduction is prohibited.
Any use in general of the assets protected by the Intellectual Property rights of RAASM S.p.A. is prohibited and is subject to the prior written permission of RAASM S.p.A.

ADVANCED FLUID MANAGEMENT SOLUTIONS

The manufacturer declines any responsibility for possible inaccuracies contained in this catalogue, due to printing or transcription errors.

The manufacturer reserves the right to make any changes or improvements of a functional, technical or aesthetic nature without prior notice.

The publication and the reprint of this catalogue is forbidden.

THREE WORDS TO DESCRIBE RAASM

Technology

The starting point for the entire production cycle is the research and development of cutting-edge new solutions which lead to the development of **high quality products, fully produced in Italy.**

Quality

The quality of our product manufacturing has always been our absolute priority. To reach this goal rigorous testing accompanies every phase of the manufacturing process.

Functionality

RAASM offers the most complete range of lubrication products suited to many sectors.
Our aim is to always be available to provide solutions to our customers.

RAASM S.p.A.
36022 S. ZENO DI CASSOLA (VI)
Via Marangoni, 33 - ITALY

Export department
Tel. +39 0424 571130 - Fax 0424 571135
Technical department
Tel. +39 0424 571150 - Fax 0424 571155

info@raasm.com
www.raasm.com

GB

WRCAVVM2015-GB

Authorized distributor

All rights reserved to Raasm S.p.A.