HOSE REELS AISI 316

The present solution,
the future ally

ADVANCED FLUID
MANAGEMENT SOLUTIONS

No. 222-AA

WATER
≤ 130° C

OIL AND
SIMILAR

GREASE

DIESEL FUEL

ADBLUE®

ADVANCED FLUID MANAGEMENT SOLUTIONS

40 years
1975 - 2015

ADVANCED FLUID MANAGEMENT SOLUTIONS

at your service since 1975

RAASM works to offer the best through continuous improvement, in terms of performance, functionality and reliability of its products.

www.raasm.com

HELP THE NATURE

Packaging contains, depending on the articles, one or more of the following materials; they must be recycled in accordance with current regulations in the country of use.

cardboard • polyethylene sack • polystyrene paper • wood • nails • plastic strap cellophane • clips • gummed paper

STUDY, RESEARCH AND DESIGN

The real strength of a firm starts with the ability of its study and research departments to always find the most suitable solutions to address market demands.

ASSEMBLY LINES

Dedicated equipment specially designed to facilitate assembly operations, at the same time allowing an effective and automatic control of quality.

PACKAGING

The product is carefully packaged with special security measures that protect it from any risks during transportation.

STORAGE OF COMPONENTS

Our vertical stores enable quick and careful preparation of the components and spare parts intended for assembly and sale.

TECHNOLOGY

INNOVATION

QUALITY

SAFETY

RELIABILITY

ADVANCED FLUID MANAGEMENT SOLUTIONS

TECHNICAL ASSISTANCE

RAASM has the most complete range of products for lubrication and the dispensing of fluids. The aim is to always respond fully to the questions of our customers and meet all their needs.

Hose reel AISI 316

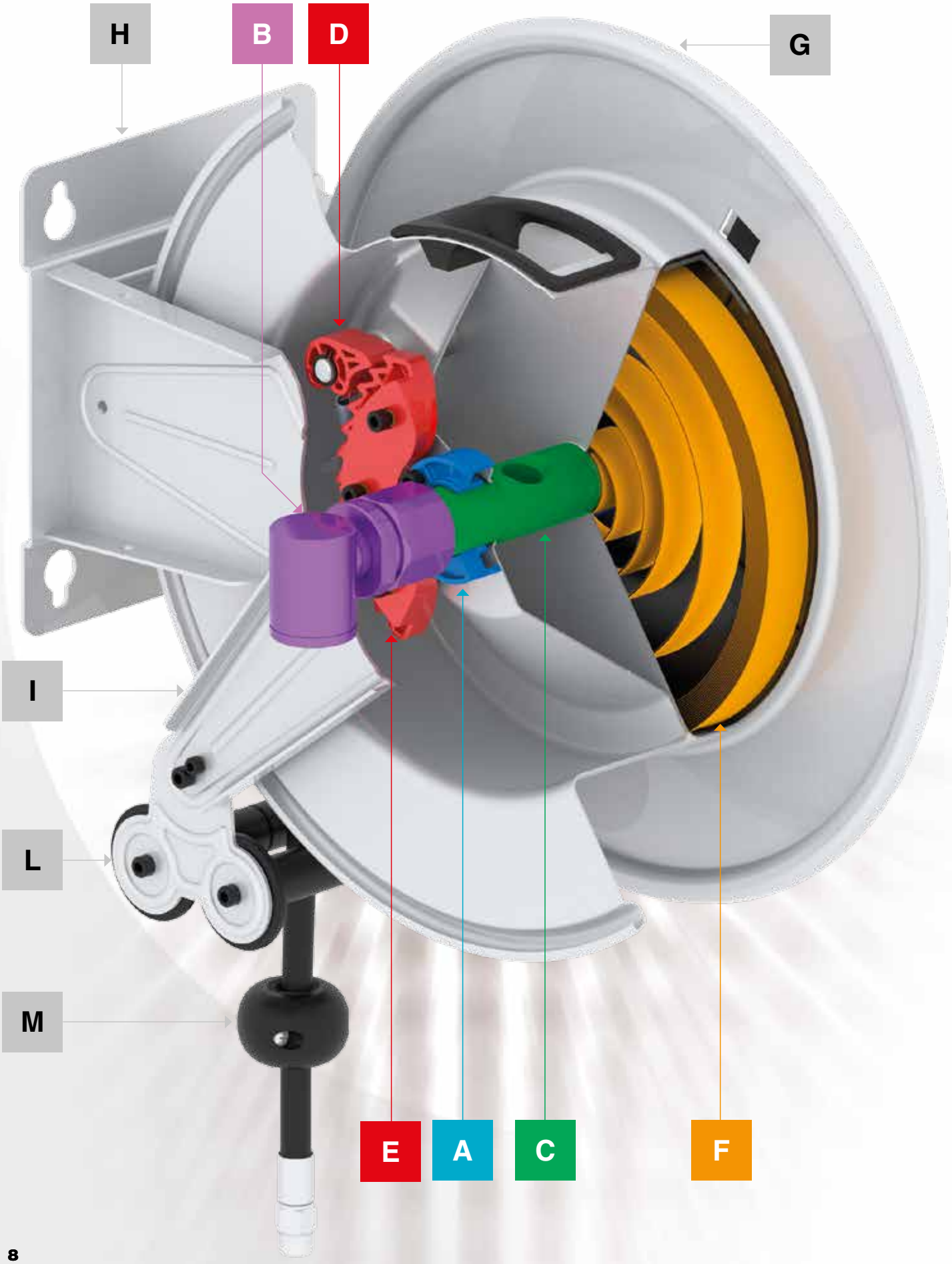

TECHNICAL CHARACTERISTICS

A

DRUM SUPPORT BUSHINGS
Drum support bushings in Tenaxid, self lubricating, material resistant against corrosion.

B

SWIVEL JOINT
Designed with the ideal internal dimensions to guarantee the most possible flow. It is realized in AISI 316 with seals in Teflon®.

C

CENTRAL PIN
Made in stainless steel AISI 316, with passage sized to avoid pressure losses.

D

PAWL
Easy to remove in case of maintenance, of increased thickness with reinforcing ribs ensuring high stress resistance and durability.

E

STOPPING RACK
It offers the possibility to block the cable every 0,5 m.

F

REWINDING SPRING
Rewinding spring totally protected from the external environment. The spring is subjected to a durability test of 20000 cycles (each cycle corresponds to the complete unwinding and rewinding of the cable) thus simulating an average life of over 10 years. Possibility to intervene to adjust the spring force increasing or decreasing the preload.

G

DRUM
Sturdy and practical, with beads to reinforce the structure and rounded border. Made in stainless steel AISI 316.

H

FIXED BRACKET
Solid and compact fixed bracket with 4 slotted mounting holes for easy and safe installation. Made in stainless steel AISI 316.

I

ADJUSTABLE ARM
To favour hose extraction according to hose reel installation.

L

HOSE GUIDE WITH ROLLERS
Wide width which allows to guide properly the hose for correct rewind. Equipped rollers, arranged horizontally that reduce hose wear.

M

HOSE STOP
Comes with all hose reels equipped with hose, complete with adapters for using hoses of different diame

Strength points

- **The stainless steel AISI 316** allows the use of the hose reel in aggressive environments
- Can be used with **a lot of fluids and corrosive solutions**
- **Swivel joint and screws** in stainless steel AISI 316 for a better quality and durability
- All the models are in accordance with the **Atex directive**
- Available with **all the Raasm standard dimensions** (430-530-540-560 series)
- Hygienic hose available on request **for food industry**
- Greater security in your workplace with an equipment always **in order**

Hose Reel AISI 316

SERIES 430

SERIES 530

These hose reels have the drum and the fixed bracket in stainless steel AISI 316. For this reason they are highly resistant during the years, in aggressive environments and with corrosive fluids.

In accordance with directive
Atex 94/9 IIB 2 GD c T4 T135 °C X

Toughness and durability

Note: All the hose reels in the table are without hose

	SERIES 430	SERIES 530	Connection	
	P/N	P/N	inlet	outlet
100 bar - **AISI 316 stainless steel** swivel joint - **"Teflon®"** seals	**8435.200**	**8535.200**	F1/2"G	F1/2"G
200 bar - **AISI 316 stainless steel** swivel joint - **"Teflon®"** seals	**8435.300**	**8535.300**	F3/8"G	F1/2"G
400 bar - **AISI 316 stainless steel** swivel joint - **"Teflon®"** seals	**8435.350**	**8535.350**	F3/8"G	F1/2"G
	N°1 packing m³ 0,098 kg 16	N°1 packing m³ 0,130 kg 26		

Some of the most common fluids compatible

Water ≤ 130° C	Oil and similar	Grease	Diesel fuel	AdBlue®

HOSE REEL CAPACITY

Ø HOSE EXTERNAL		SERIES 430	SERIES 530
1/4"	14 mm	Length max 20 m	Length max 25 m
3/8"	17 mm	Length max 21 m	Length max 25 m
1/2"	20 mm	Length max 15 m	Length max 25 m
5/8"	21 mm	Length max 12 m	Length max 25 m
3/4"	27 mm	Length max 8 m	Length max 15 m
1"	34 mm	-	Length max 11 m

OVERALL DIMENSIONS (mm)

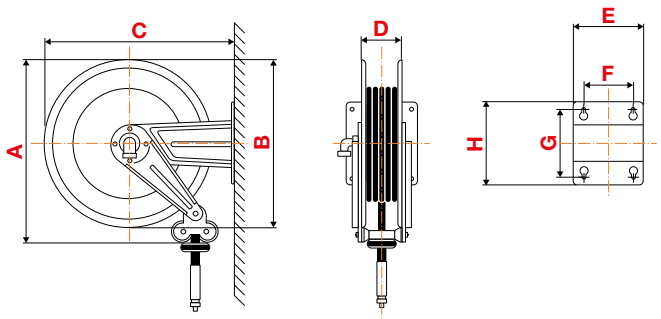

SERIES	A	B	C	D	E	F	G	H
430	460	420	460	115	186	140	196	226
530	550	510	560	115	203	153	220	258

Hose Reel
AISI 316

These hose reels have the drum and the fixed bracket in stainless steel AISI 316. For this reason they are highly resistant during the years, in aggressive environments and with corrosive fluids.

SERIES 540

SERIES 560

In accordance with directive
Atex 94/9 IIB 2 GD c T4 T135 °C X

Toughness and durability

Note: All the hose reels in the table are without hose

	SERIES 540	SERIES 560	Connection	
	P/N	P/N	inlet	outlet
100 bar - **AISI 316 stainless steel** swivel joint - "**Teflon®**" seals	**8545.200**	**8565.200**	F 1" G	F 1" G
	N°1 packing m³ 0,214 kg 21	N°1 packing m³ 0,264 kg 39		

Some of the most common fluids compatible

Water ≤ 130° C	Oil and similar	Grease	Diesel fuel	AdBlue®

HOSE REEL CAPACITY

Ø HOSE EXTERNAL		SERIES 540	SERIES 560
1/4"	14 mm	Length max 30 m	Length max 55 m
3/8"	17 mm	Length max 30 m	Length max 55 m
1/2"	20 mm	Length max 30 m	Length max 60 m
5/8"	21 mm	Length max 30 m	Length max 60 m
3/4"	27 mm	Length max 20 m	Length max 40 m
1"	34 mm	Length max 15 m	Length max 30 m

OVERALL DIMENSIONS (mm)

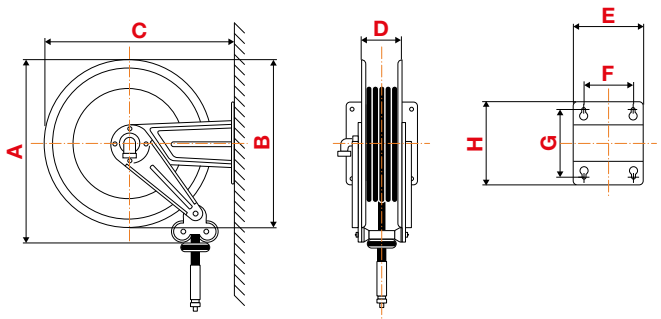

SERIES	A	B	C	D	E	F	G	H
540	550	510	573	190	300	218	228	268
560	550	510	578	368	488	399	238	272

Manual Hose reel AISI 316

TECHNICAL CHARACTERISTICS

A

DRUM SUPPORT BUSHINGS
Drum support bushings in Tenaxid, self lubricating, material resistant against corrosion.

B

SWIVEL JOINT
Designed with the ideal internal dimensions to guarantee the most possible flow. It is realized in AISI 316 with seals in Teflon®.

C

CENTRAL PIN
Made in stainless steel AISI 316, with passage sized to avoid pressure losses.

D

REGULATION CLUTCH
Allows to regolate the drum rotation speed during the hose unwinding. It works also as a rotation lock.

E

SECURITY SYSTEM
The hose reel is designed with a new security system that allows the handle to stay in place, avoiding the rotation, during the manual hose unreeling.

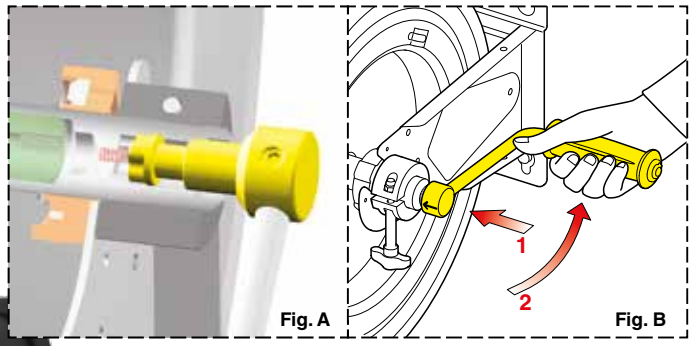

Fig. A Fig. B

F

ROTATION LOCK (OPTIONAL)
This special device stops any drum movement and is available only on request. Its use is highly recommended during moving applications (i.e. trucks, machineries subject to vibrations, etc.).

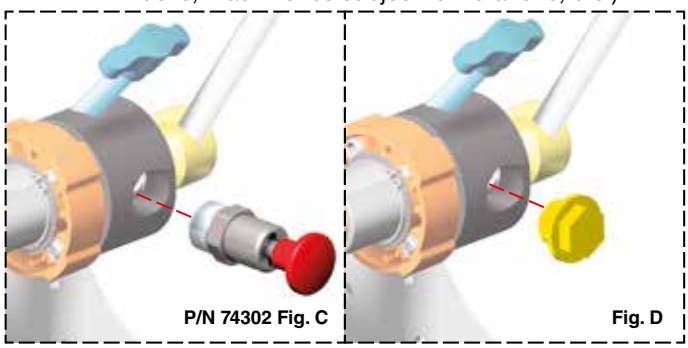
P/N 74302 Fig. C Fig. D

G

DRUM
Sturdy and practical, with beads to reinforce the structure and rounded border. Made in stainless steel AISI 316.

H

FIXED BRACKET
Solid and compact fixed bracket with 4 slotted mounting holes for easy and safe installation. Made in stainless steel AISI 316.

Strength points

- Security system that **prevents the handle rotation** while the hose unreels, thus avoiding accidental damages to people or things
- **AISI 316 stainless** steel version for particularly aggressive environments
- **Max reel capacity.** The spring absence allows for the maximum utilization of the drum space
- **Great handling** thanks to its lightweight
- Available with **rotation block** for use in environments with vibrations (trucks, industrial machines, etc)
- **Compatible with numerous fluids types,** also aggressive
- Hygienic hose available on request **for food industry**
- Available with **all the Raasm standard dimensions** (430-530-540-560 series)

MANUAL Hose Reel AISI 316

These manual hose reels have the drum and the fixed bracket in stainless steel AISI 316. For this reason they are highly resistant during the years, in aggressive environments and with corrosive fluids.

Security and durability

OPTIONAL

P/N 74302
Rotation lock
(see page 13)

SERIES 430

SERIES 530

Note: All the hose reels in the table are without hose

	SERIES 430 P/N	SERIES 530 P/N	Connection inlet	Connection outlet
100 bar - **AISI 316 stainless steel** swivel joint - "**Teflon®**" seals	**74350.200**	**75350.200**	F1/2"G	F1/2"G
200 bar - **AISI 316 stainless steel** swivel joint - "**Teflon®**" seals	**74350.300**	**75350.300**	F3/8"G	F1/2"G
400 bar - **AISI 316 stainless steel** swivel joint - "**Teflon®**" seals	**74350.350**	**75350.350**	F3/8"G	F1/2"G
	N°1 packing m³ 0,122 kg 14,5	N°1 packing m³ 0,156 kg 16		

Some of the most common fluids compatible

Water ≤ 130° C	Oil and similar	Grease	Diesel fuel	AdBlue®

HOSE REEL CAPACITY

Ø HOSE EXTERNAL		SERIES 430	SERIES 530
1/4"	14 mm	Length max 20 m	Length max 25 m
3/8"	17 mm	Length max 21 m	Length max 25 m
1/2"	20 mm	Length max 15 m	Length max 25 m
5/8"	21 mm	Length max 12 m	Length max 25 m
3/4"	27 mm	Length max 8 m	Length max 15 m
1"	34 mm	-	Length max 11 m

OVERALL DIMENSIONS (mm)

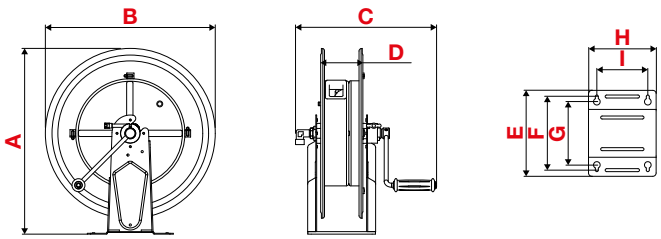

SERIES	A	B	C	D	E	F	G	H	I
430	458	415	410	115	226	196	170	186	140
530	558	510	423	115	258	221	190	203	153

MANUAL Hose Reel AISI 316

These manual hose reels have the drum and the fixed bracket in stainless steel AISI 316. For this reason they are highly resistant during the years, in aggressive environments and with corrosive fluids.

Security and durability

OPTIONAL

P/N 74302
Rotation lock
(see page 13)

SERIES 540

SERIES 560

Note: All the hose reels in the table are without hose

	SERIES 540	SERIES 560	Connection	
	P/N	P/N	inlet	outlet
100 bar - **AISI 316 stainless steel** swivel joint - "**Teflon®**" seals	**75450.200**	**75650.200**	F 1" G	F 1" G
	N°1 packing m³ 0,214 kg 21	N°1 packing m³ 0,280 kg 36		

Some of the most common fluids compatible

Water ≤ 130° C	Oil and similar	Grease	Diesel fuel	AdBlue®

HOSE REEL CAPACITY

Ø HOSE EXTERNAL		SERIES 540	SERIES 560
1/4"	14 mm	Length max 30 m	Length max 55 m
3/8"	17 mm	Length max 30 m	Length max 55 m
1/2"	20 mm	Length max 30 m	Length max 60 m
5/8"	21 mm	Length max 30 m	Length max 60 m
3/4"	27 mm	Length max 20 m	Length max 40 m
1"	34 mm	Length max 15 m	Length max 30 m

OVERALL DIMENSIONS (mm)

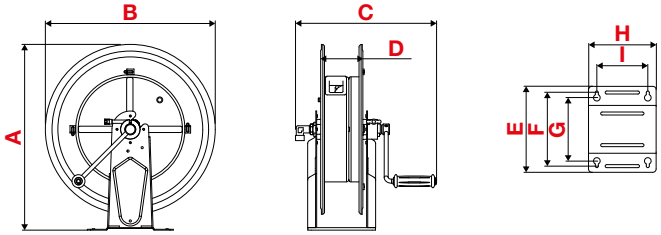

SERIES	A	B	C	D	E	F	G	H	I
540	557	510	482	190	258	219	182	272	222
560	578	510	667	368	282	248	210	468	399

ADVANCED FLUID
MANAGEMENT SOLUTIONS

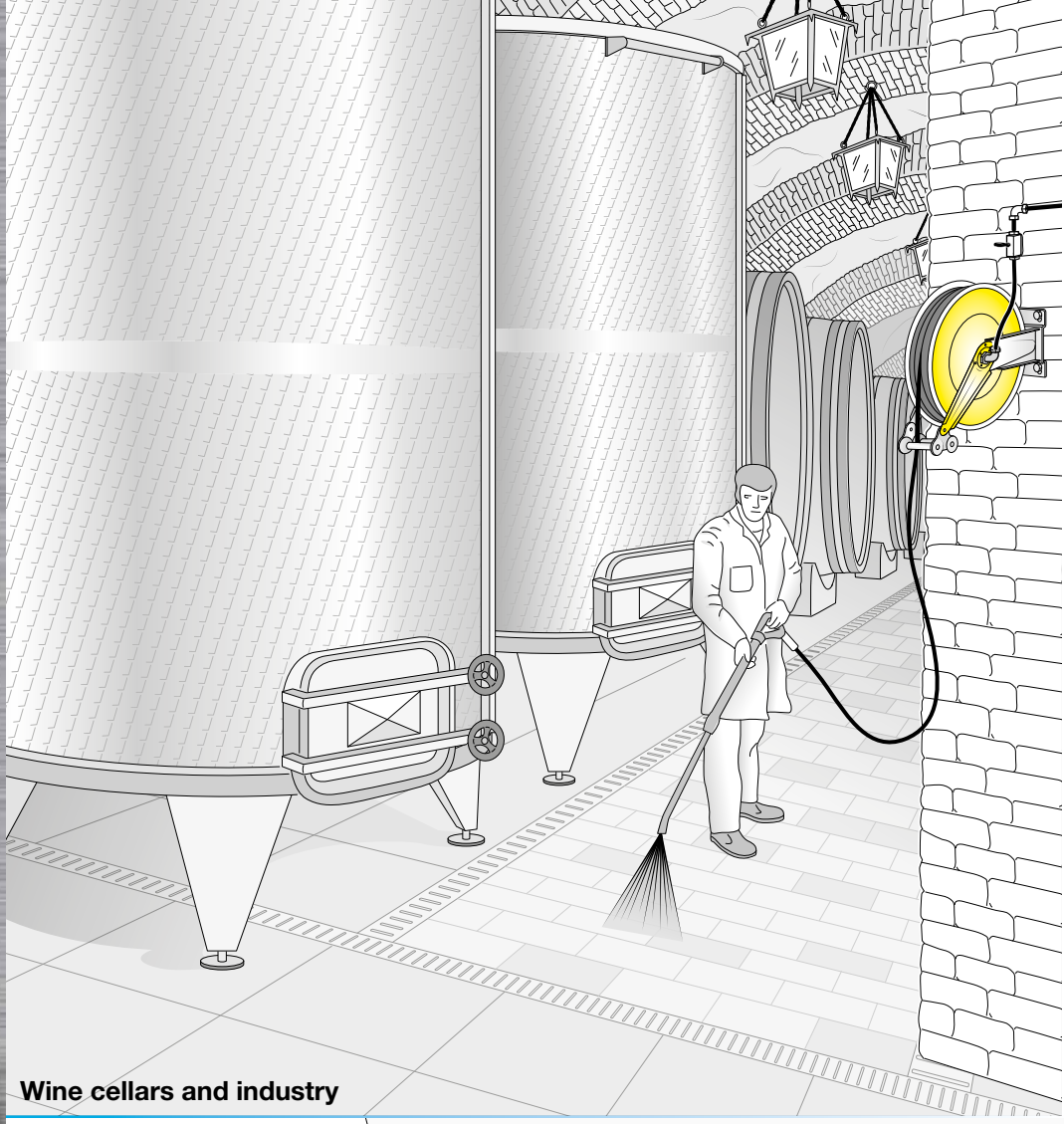

Wine cellars and industry

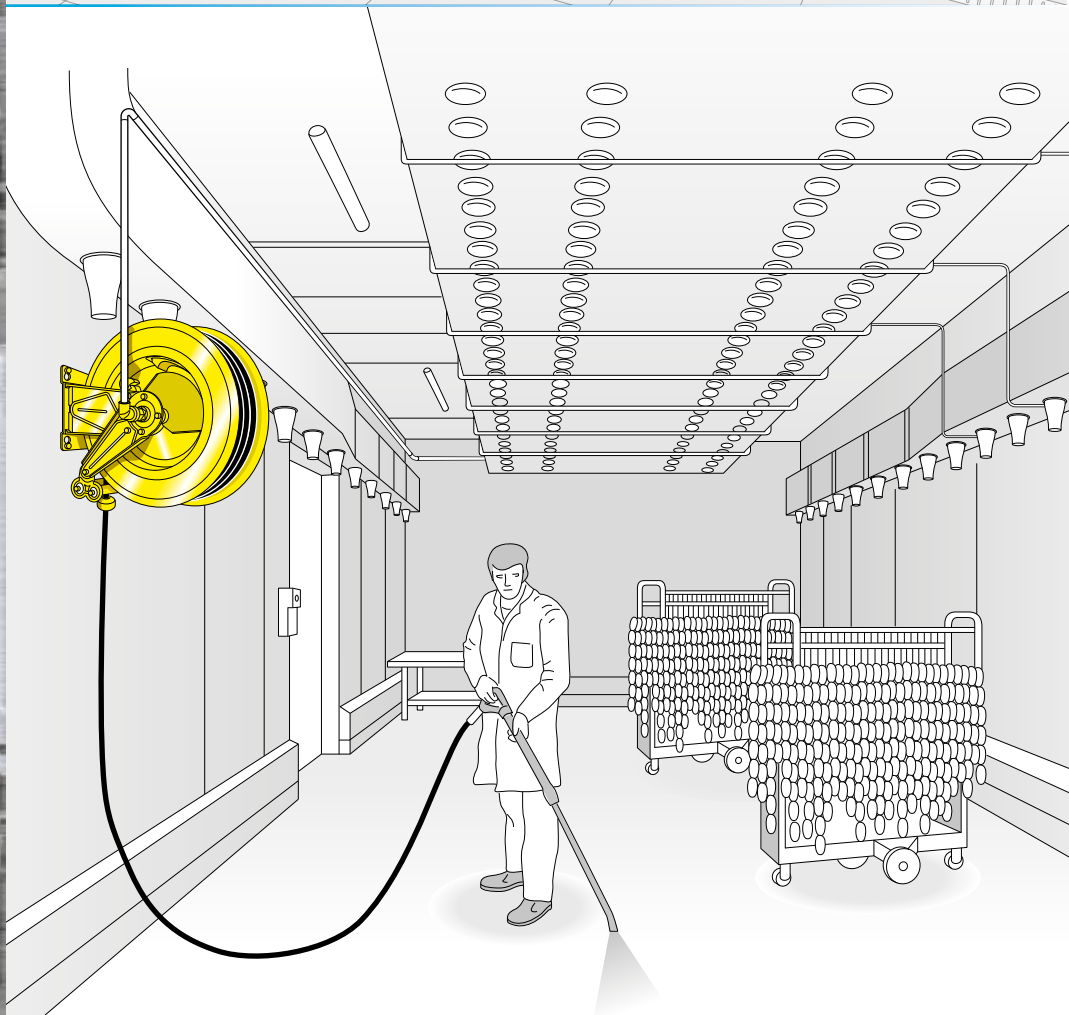

Meat industry

APPLICATION FIELDS

In the food industry, in swimming pools or harbors: these are only some examples about the use of the stainless steel AISI 316 hose reels.
Other use sectors are:

- **heavy industry**
- **mines**
- **off-shore platformes**
- **road cleaning**
- **wine cellars, dairies and oil mills**
- **and many others…**

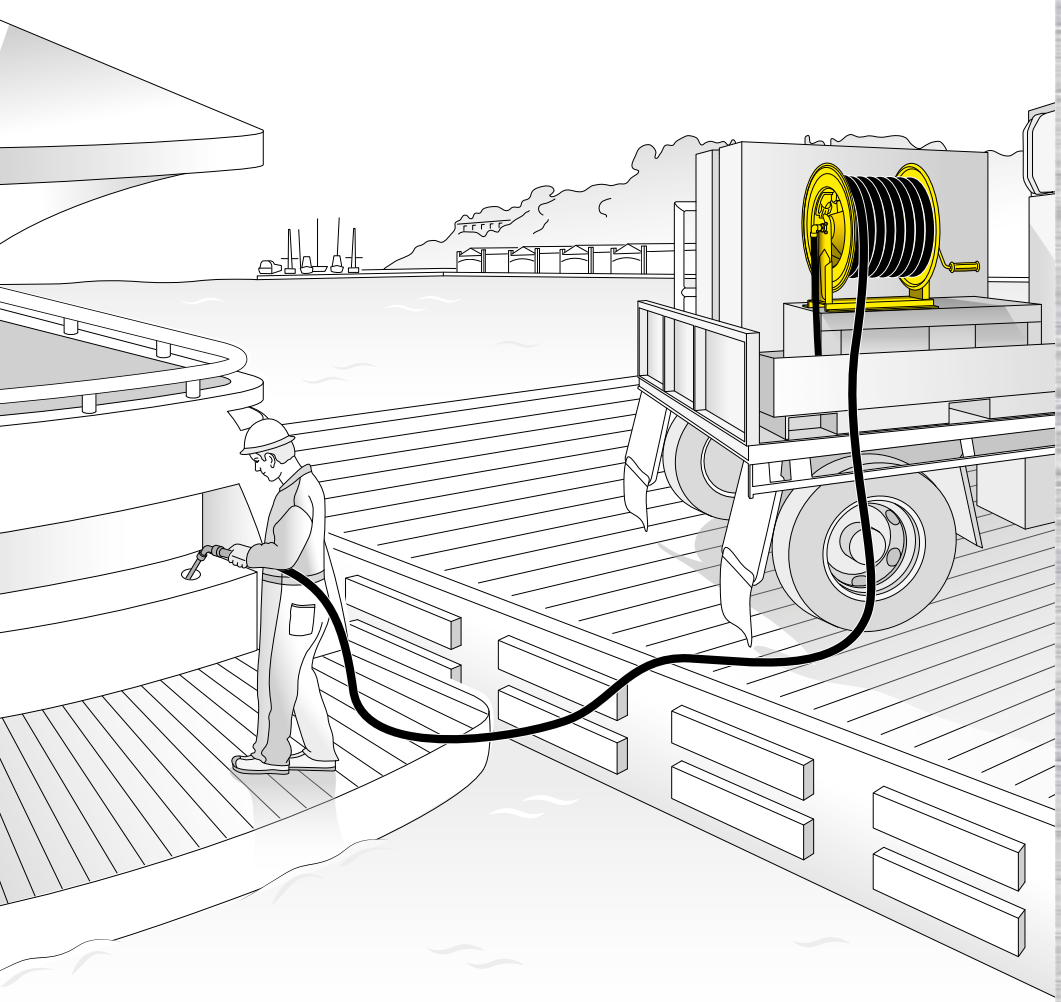

Refuelling boats

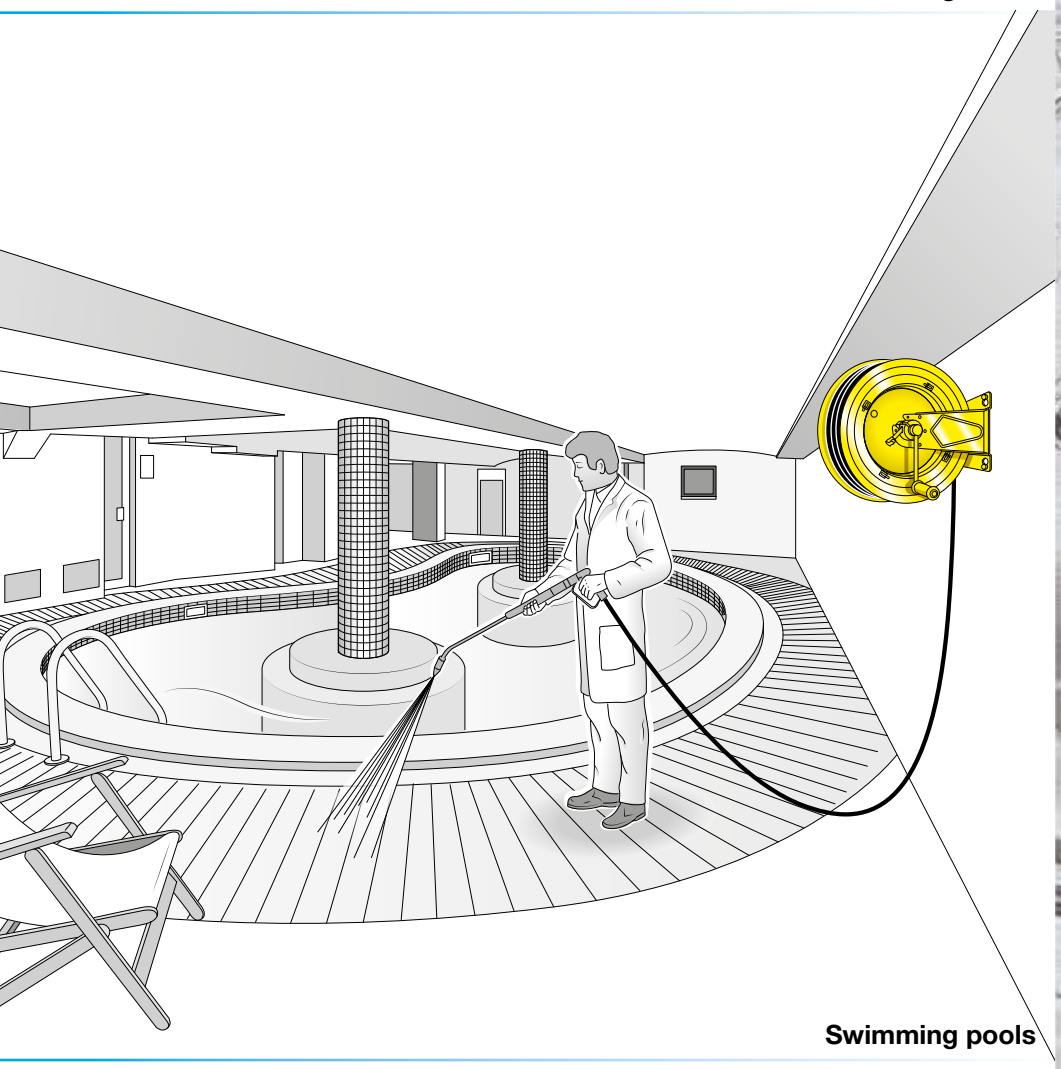

Swimming pools

RAASM products
are present worldwide through a network of
qualified dealers.

www.raasm.com

RAASM

The company RAASM S.p.A. holds the exclusive Intellectual Property rights on the RAASM trademark and all rights to its use and reproduction are reserved.
The RAASM trademark is a registered trademark and is protected at an international level. No part of the RAASM trademark and its logo may be utilized, copied and/or used in any form, time and space, even by means of improper alterations.
The Intellectual Property rights on the images published in this catalogue are owned exclusively by RAASM S.p.A. and any unauthorized reproduction is prohibited.
Any use in general of the assets protected by the Intellectual Property rights of RAASM S.p.A. is prohibited and is subject to the prior written permission of RAASM S.p.A.

ADVANCED FLUID MANAGEMENT SOLUTIONS

The manufacturer declines any responsibility for possible inaccuracies contained in this catalogue, due to printing or transcription errors.

The manufacturer reserves the right to make any changes or improvements of a functional, technical or aesthetic nature without prior notice.

The publication and the reprint of this catalogue is forbidden.

THREE WORDS TO DESCRIBE RAASM

Technology

The starting point for the entire manufacturing cycle is the research and development of cutting-edge solutions for products fully made in Italy.

Quality

One of our most important target is to offer high level of quality. Rigorous tests follow every single phase of the manufacturing process.

Efficiency

RAASM offers the most complete range of fluid management solutions suitable for many sectors. Our success is founded upon our ability to identify and fulfill specific customers' requirements.

RAASM S.p.A.
36022 S. ZENO DI CASSOLA (VI)
Via Marangoni, 33 - ITALY

Export department
Tel. +39 0424 571 130 - Fax 0424 571 135
Technical department
Tel. +39 0424 571 150 - Fax 0424 571 155

info@raasm.com
www.raasm.com

GB

WRAVVAISI316-GB

Authorized distributor

All rights reserved to Raasm S.p.A.