ADVANCED FLUID
MANAGEMENT SOLUTIONS

TURN ON your world

manage your energy orderly

No. 222-AE

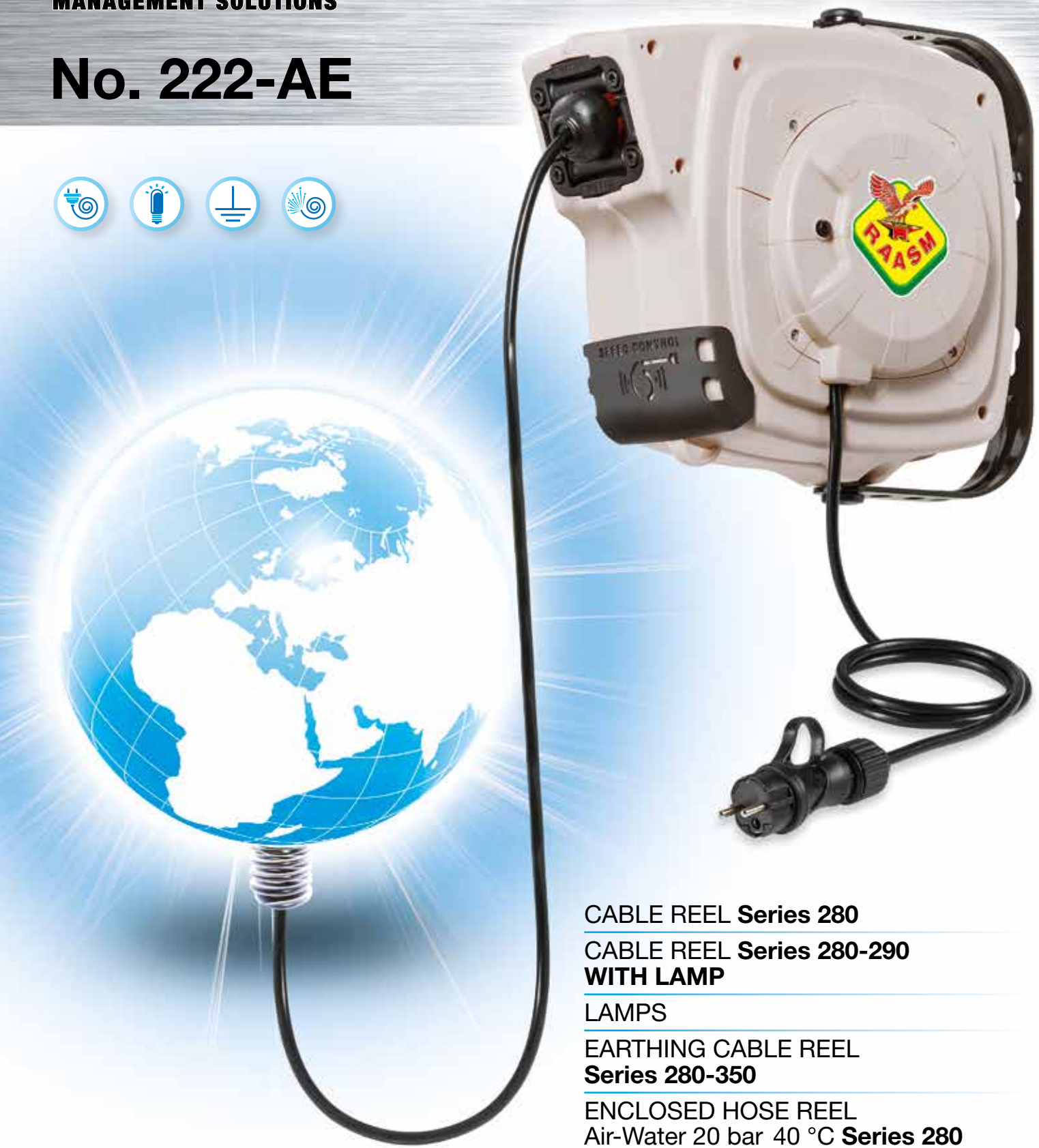

CABLE REEL **Series 280**

CABLE REEL **Series 280-290**
WITH LAMP

LAMPS

EARTHING CABLE REEL
Series 280-350

ENCLOSED HOSE REEL
Air-Water 20 bar 40 °C **Series 280**

ADVANCED FLUID
MANAGEMENT SOLUTIONS

www.raasm.com

ADVANCED FLUID
MANAGEMENT SOLUTIONS

at your service since 1975

RAASM seeks to offer the best through continuous improvement, in terms of performance, functionality and reliability of its products.

STUDY, RESEARCH AND DESIGN

The real strength of a firm starts with the ability of its study and research departments to always find the most suitable solutions to address market demands.

LIFE TESTS

A sophisticated test room enables careful testing of the quality of new products before they are put on the market.

ELECTRICAL TESTS

A computerized system tests every single cable reel to guarantee the maximum quality, and the correct wiring.

ASSEMBLY LINES

Dedicated equipment specially designed to facilitate assembly operations, at the same time allowing an effective and automatic control of quality.

STORAGE OF COMPONENTS

Our vertical stores enable quick and careful preparation of the components and spare parts intended for assembly and sale.

TECHNICAL ASSISTANCE

RAASM target is to give always a comprehensive answer to its customers questions and to satisfy each of their single need.

CABLE REEL AND HOSE REEL

safety and quality

All the products shown in the present catalogue have been realized in accordance to the CE safety specifications. The CE directives regulating families of products are listed in the following pages together various with the technical data of the products.

INDEX

CABLE REEL **Series 280**

TECHNICAL CHARACTERISTICS page 12

USE OF ADJUSTABLE BRACKET page 14

ACCESSORIES page 15

ELECTRICAL CABLES page 16

Series 280 - 230 V SINGLE-PHASE
Without Socket page 18

Series 280 - 400 V THREE-PHASE
Without Socket page 20

Series 280 - 230 V SINGLE-PHASE
With single socket and “shucko” - IP44
With triple socket and “shucko” - IP44 page 22

CABLE REEL **Series 280 - 290 WITH LAMP**

Series 280 - Without transformer
With fluorescent portable lamp 11W
Series F230 - F12 - F24 page 24

Series 280 - Without transformer
With portable LED lamp
Series L1224 page 26

Series 290 - With 230 V transformer
With portable LED lamp
Series L1224 page 28

LAMPS

TECHNICAL CHARACTERISTICS page 32

Portable lamp Series F230 - F12 - F24
Equipped with fluorescent light bulb page 34

Portable lamp Series L1224
Equipped with LED holder unit page 35

EARTHING CABLE REEL **Series 280 - 350**

OPERATION page 37

Enclosed cable reel Series 280 Earthing page 38

Earthing cable reel Series 350 page 40

TECHNICAL CHARACTERISTICS page 41

ENCLOSED HOSE REEL **Series 280**

TECHNICAL CHARACTERISTICS page 42

ENCLOSED HOSE REEL Series 280
Air-Water 20 bar - 40 °C page 44

CABLE REEL PRESENTATION

All RAASM cable reels rewind automatically and are equipped with a spring tested for tens of thousands of cycles which ensure a constant force. **They are sturdy, compact, easy to position and removable. They allow managing with extreme ease and safety electrical cables of various sizes and cross sections ensuring a tidy and safe work environment.**

All models are equipped with:
- **Rewinding spring.**
- **Cable stop rack work.**
- **Protective shell in shockproof material.**
- **Cable guide with rollers.**
- **Fixing bracket.**
- **System for the manual reset of electrical power (to prevent damage from eventual overloads) with rewinded cable.**
- **Inlet cable** for connection to the mains.

ACCESSORIES

Each model of RAASM cable reel is customizable with the following accessories:
- **Fixing bracket** with “bayonet” coupler.
- **Protection cap.**
- **Rewinding’ clutch.**

advantages

- **Electric collector** designed for better performances also with high currents.
- **Thermal protector** against overheating of the rewinded cable mounted in all the models.
- **IP44 protection degree** provided for all the electrical parts.
- **Spring** tested for more than 10 working years with the possibility to easily adjust the rewinding force.
- **Cable guide with rollers** equipped with 4 rollers in each model designed to save the work life of the cable.
- **Different options for different needs:** rewinding clutch, bayonet bracket and protection cap.

CABLE REEL

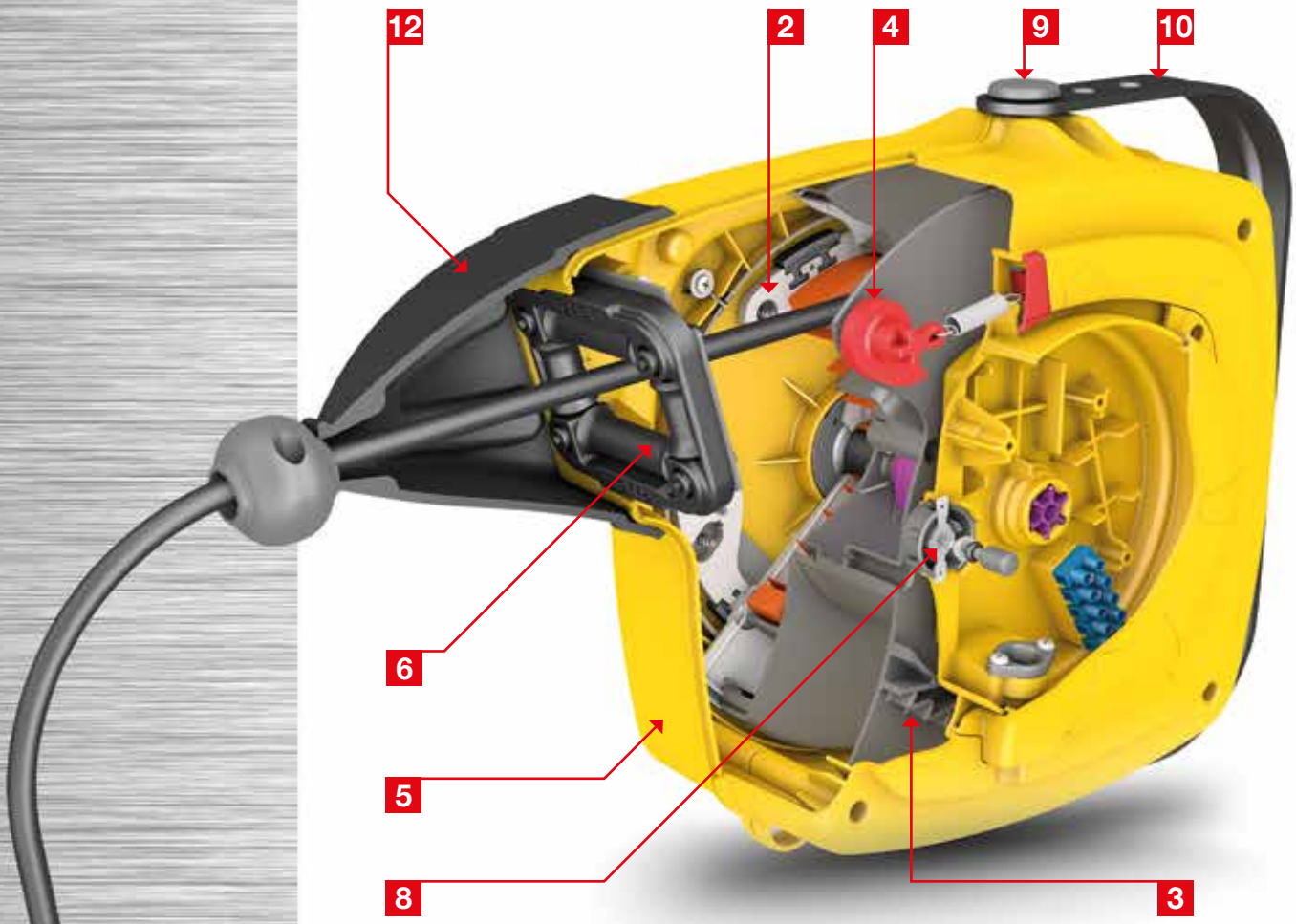

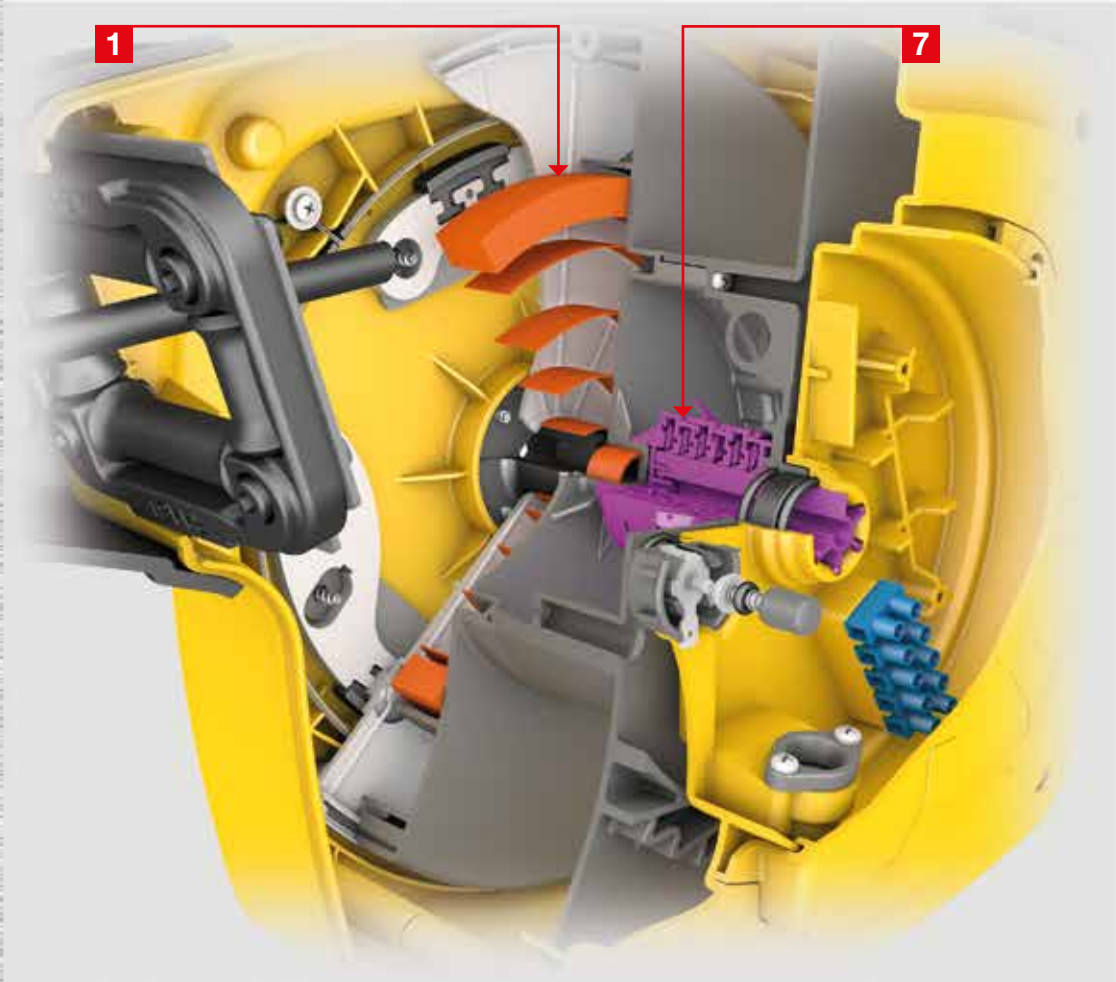

TECHNICAL CHARACTERISTICS

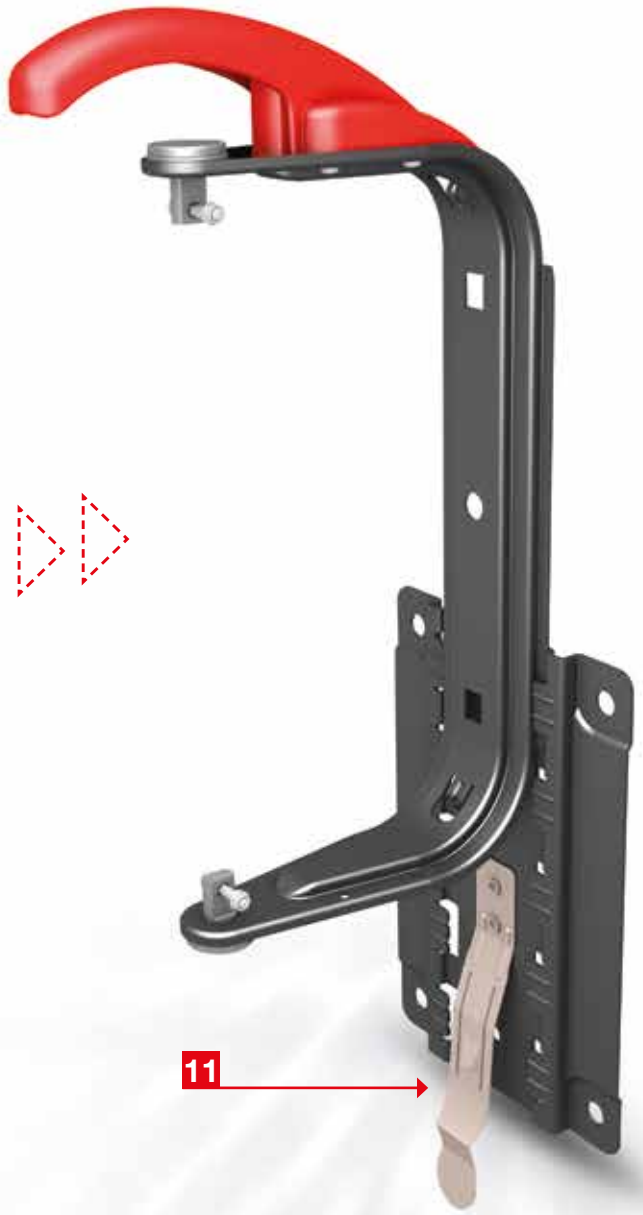

1 SPRING
Rewinding spring totally protected from the external environment. The spring is subjected to a durability test of 20000 cycles (each cycle corresponds to the complete unwinding and rewinding of the cable) thus simulating an average life of over 10 years.
Possibility to intervene to adjust the spring force increasing or decreasing the preload.

2 REWINDING CLUTCH
Optional, devoid of complex and potentially wearing kinematic motions, allows the rewinding of the drum at a safe speed.

3 STOPPING RACK
It has an increased width and reinforcement ribs ensuring greater durability and sturdiness. It offers the possibility to block the cable every 0,5 m. allowing the unwinding of the desired length.

4 PAWL
Easy to remove, of increased thickness with reinforcing ribs ensuring high stress resistance and durability.

5 STRUCTURE
Strong and compact made in shockproof material of high mechanical resistance designed to withstand over time.

6 CABLE GUIDE WITH ROLLERS
Sturdy and resistant with reinforced steel interior. Wide width which allows guiding the cable properly for correct rewind. Equipped with 4 rollers, 2 arranged horizontally (above and below) and 2 arranged vertically (left and right) that reduce cable wear.

7 ELECTRIC COLLECTOR
Replaceable in one single piece, it has sliding contacts each provided with 3 sliding lines to reduce the electrical resistance and the heating during operation.
Equipped with double earth contact.

8 THERMAL PROTECTOR
Safety system against overheating of the rewinded cable.

9 SIDE CLUTCH
The bracket is equipped with a special clutch which controls the rotation speed on the right and on the left of the cable reel.

10 ADJUSTABLE BRACKET
Adjustable up to 90 ° per side, constructed with sturdy structure, with fixing slotted holes that facilitate wall mounting.

11 BAYONET BRACKET
A bracket with bayonet type quick coupling is available as optional it allows an easier movement of the cable reeler in the various workstations.

12 PROTECTION CAP
Optional, in NBR synthetic rubber, it protects the cable reel from accidental entrance of foreign bodies through the cable guide.

ITALIAN PRODUCT

Guarantee and quality of the components are our priority!

USE OF **ADJUSTABLE BRACKET**

POSITION 1

The adjustable bracket of the cable reel may assume various positions:
The **position 1** is particularly suitable for "single" installation on the wall or ceiling. This position allows the rotation of the cable reel around the central axis supported by the bracket, allowing maximum flexibility to the operator in the use of the cable in all directions.

POSITION 2

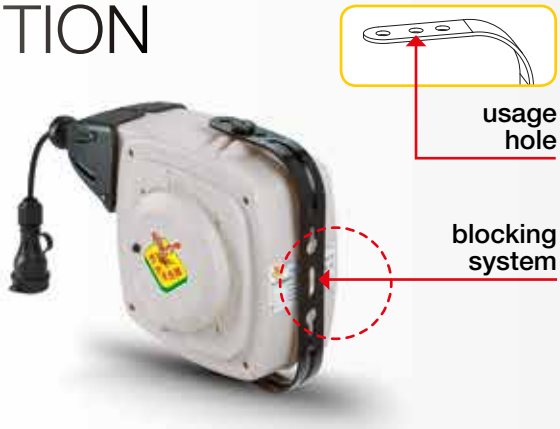

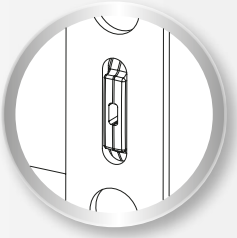

The **position 2** is suitable for installation of the cable reel "in series" (ceiling wall / floor or bench) because the rotation is blocked by the bracket that creates an interlocking with the guards of the cable reel.

POSITION 3

The **position 3** is suitable for specific installation schemes, that is when the pulling and exit direction of the cable is parallel to the wall where the cable reel is installed.

In order to pass from an installation position to another it is necessary to remove the bracket.

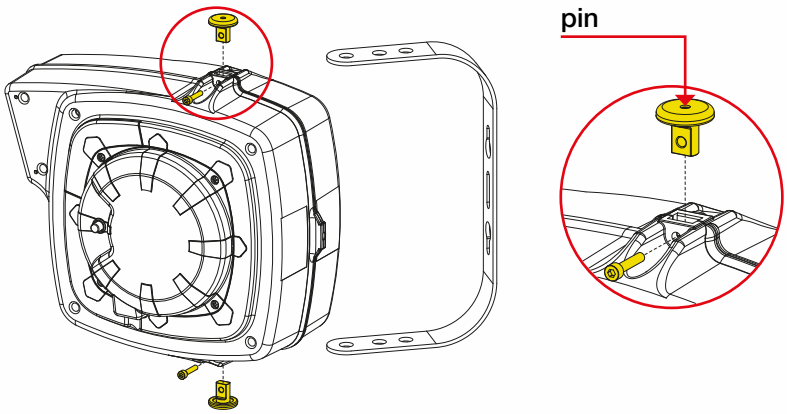

ACCESSORIES

REWINDING CLUTCH

Cable reels Series 280 and Series 290 can be equipped with a brake acting while rewinding the cable.
This accessory limits the maximum rotation speed making secure even accidental and uncontrolled rewinding.
The version with the clutch, is distinguished from the

"SPEED CONTROL" plate

⚠ **TO BE REQUESTED WITH THE ORDER**

PROTECTION CAP

P/N **728115**

The protection cap of the cable guide, made of flexible black rubber, **prevents accidental entry of foreign bodies** and ensures to the cable reeler the IP 45 protection degree.
On request it can be mounted on the cable reel you want to purchase using the appropriate customized code, see the following pages.

BAYONET BRACKET

P/N **89003**

A bracket with bayonet type quick coupling is available on request: (provided with wall bracket P/N 89001), it allows an easier movement of the cable reel in the various workstations.

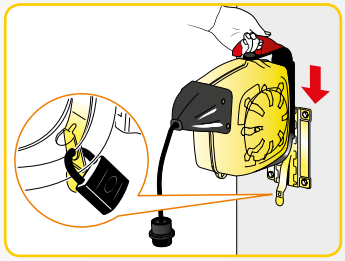

To prevent removal or theft of the cable reel it is possible to secure it with a bolt or a lock.

P/N **89001**

Wall bracket, to be bought separately in case you want to create multiple points for fitting the cable reel provided with bayonet bracket.

ELECTRICAL CABLES

The denomination **"electrical cable" indicates a conductor uniformly insulated or a set of insulated conductors,** each from the others and towards the outside, combined into a single complex complete with protection covering.

THE CABLE IS MADE OF SEVERAL PARTS:

- **The metallic part** for conducting the current consists of a single wire or several stranded wires and their conductor.
- A layer of **insulating material** surrounds the conductor.
- The set of the conductor and its isolation constitutes the cable **core;** each cable may have more cores.
- The **sheath** has a protective function of the cable cores. The sheath in general is always in insulating material.

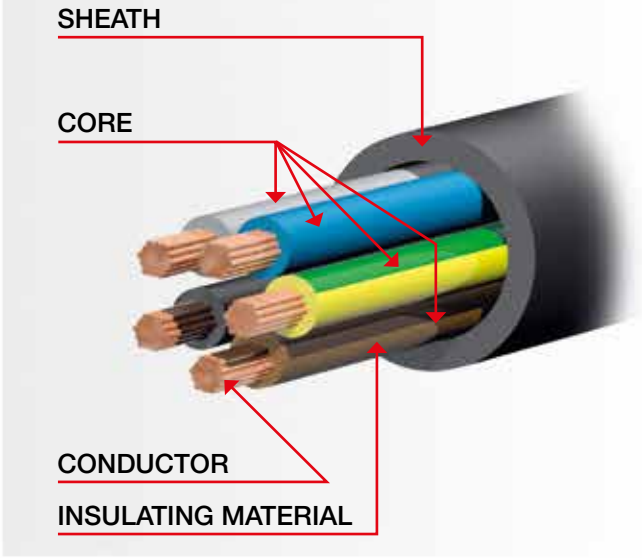

TECHNICAL TABLE READING GUIDE

NUMBER OF CONDUCTORS	Number of conductors uniformly insulated that make up the cross section of the electrical cable.
CONDUCTOR'S CROSS SECTION	Area (in mm²) of the cross section of each conductor.
TYPE OF INSULATING MATERIAL	The type of material (e.g. PVC, natural rubber) acts as a protective covering to the conductor with mechanical or chemical protection function.

The following guidelines have been extracted from the Standard CEI 20-27

EXAMPLE OF POWER CABLE DESIGNATION

2 x 1	-	H	05	V	V	-	F

Number of conductors and conductor cross section (in mm²)

2 x 1 2 Conductors cable, cross section 1 mm²
3G x 1 3 Conductors, cross section 1 mm² each, one of them with yellow-green insulation
4G x 1 4 Conductors, cross section 1 mm² each, one of them with yellow-green insulation
5G x 1 5 Conductors, cross section 1 mm² each, one of them with yellow-green insulation

Reference Standards

H Cable conforming to Harmonized standards CENELEC (HD 22.4 S2)
A Cable of national type approved and listed in the supplements to the Harmonized standards CENELEC
xx - N Other type of national cable

Voltage rating

03 Rated insulation voltage U_0/U = 300/300V
05 Rated insulation voltage U_0/U = 300/500V
07 Rated insulation voltage U_0/U = 450/750V
1 Rated insulation voltage U_0/U = 0,6/1KV

Insulation material

B Ethylene propylene rubber
B3 Butyl rubber
J Braided fiberglass
M Mineral
N Polychloroprene (or equivalent material)
R Natural rubber or styrene-butadiene rubber
S Silicone rubber
V Polyvinyl chloride (PVC) commonly used
X Cross-linked polyethylene

Non-metallic sheath

B Ethylene propylene rubber
B3 Butyl rubber
J Braided fiberglass
M Mineral
N Polychloroprene (or equivalent material)
R Natural rubber or styrene-butadiene rubber
S Silicon rubber
V Polyvinyl chloride (PVC) commonly used
X Cross-linked polyethylene

Conductor form

F Flexible conductor of a flexible cable for mobile service
H Highly flexible conductor of a flexible cable for mobile service
K Flexible conductor of a cable for fixed installation
R Rigid conductor, round, stringed
S Rigid conductor, sectorial, stringed
U Rigid conductor, round, single-wire

ADVANCED FLUID
MANAGEMENT SOLUTIONS

RAASM has produced a wide range of industrial cable reels that can meet the most complex and demanding requests for use fields such as industry, agriculture, petrochemical, mining, aeronautics, shipbuilding, fire departments, automotive, construction, etc.

Cable reel Series 280
230 V SINGLE PHASE
without socket

Colour:
STANDARD RAL 1004

Structure:
Shockproof plastic material

Stop:
Automatic through rack

Protection degree of electrical part:
IP44 without protection cap
IP45 with protection cap
Attention: The system is downgraded depending on the IP valve of the connected components.

Fixing bracket:
Fixed / adjustable

Usage environment temperature:
-5°C / +40°C

2

EN 61242

2006/95/CE 2004/108/CE 2011/65/UE

3

EN 61242

2006/95/CE 2004/108/CE 2011/65/UE

CABLE REEL - 230 V SINGLE PHASE							
Standard cable reel code	Number of conductors	Cable type	Cable length (m)	Cable inlet (m)	Max. power use (20°C)		Thermal protector
					Wound kW	*Unwound kW	
728A0.A21171	2	2 x 1 - H05 VV-F	17 + 1	1,2	0,9	1,4	YES
728A0.B21121	2	2 x 1 - H07 RN-F	12 + 1	1,2	0,9	1,4	YES
728A0.A22151	2	2 x 1,5 - H05 VV-F	15 + 1	1,2	1,1	2,3	YES
728A0.A23101	2	2 x 2,5 - H05 VV-F	10 + 1	1,2	1,9	3,5	YES
728A0.A31141	3	3G x 1 - H05 VV-F	14 + 1	1,2	0,9	1,4	YES
728A0.B31101	3	3G x 1 - H07 RN-F	10 + 1	1,2	0,9	1,4	YES
728A0.A32141	3	3G x 1,5 - H05 VV-F	14 + 1	1,2	1,2	2,3	YES
728A0.B32091	3	3G x 1,5 - H07 RN-F	9 + 1	1,2	1,2	2,3	YES
728A0.A33091	3	3G x 2,5 - H05 VV-F	9 + 1	1,2	1,9	3,5	YES
728A0.B33071	3	3G x 2,5 - H07 RN-F	7 + 1	1,2	1,9	3,5	YES

⚠ The following codes are considered devoid of accessories: Rewinding clutch - Protection cap - Bayonet bracket.

* The values are intended with cable completely unwound.

OVERALL DIMENSIONS **NORMAL**

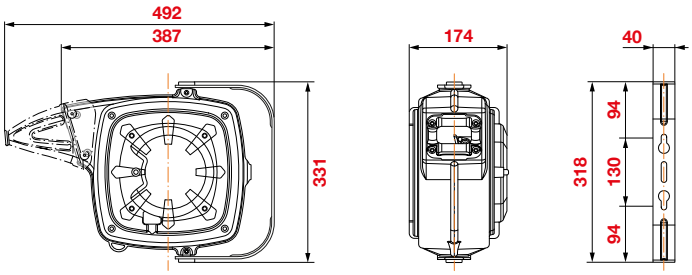

N°1 packing m³ 0,043 from kg 6,4 to 8,2

N°48 packages per pallet

OVERALL DIMENSIONS WITH **BRACKET**

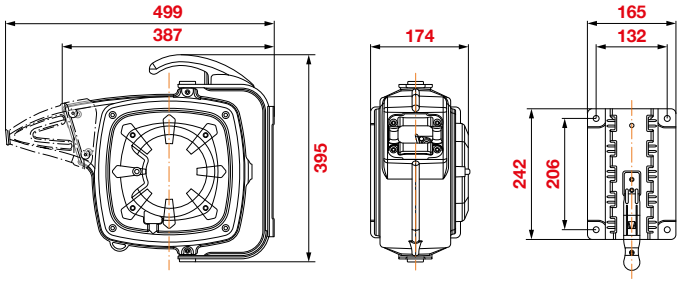

N°1 packing m³ 0,043 from kg 7,0 to 8,8

N°48 packages per pallet

How to customize the cable reel

All cable reel codes shown on the table on the opposite page are not provided with clutch, protection cover and bayonet bracket. (see accessories description on page 15). **To equip the cable reel with one or more of the above-mentioned accessories you need to modify the code as described in the table below.**

⚠ All other technical characteristics are not subject to customization

Example of standard code as indicated in the table on page 18

728	A	0	.	A	2	1	17	1

↑ **Accessories** ↓

		0	1	2	3	4	5	6	7
REWINDING CLUTCH	SPEED CONTROL	NO	YES	NO	NO	YES	YES	NO	YES
PROTECTION CAP		NO	NO	YES	NO	YES	NO	YES	YES
BAYONET BRACKET		NO	NO	NO	YES	NO	YES	YES	YES

Customizing the cable reel: for example, if you are interested to the cable reel **728A0.A21171** but equipped with **clutch** and **protection cap** you will have to put number 4 instead of 0 so that the final code of the cable reel will be **728A4.A21171**

The version equipped with a **clutch** that allows rewinding the cable at a controlled rate, is characterized by the plate **"SPEED CONTROL"**

⚠ **TO BE REQUESTED WITH THE ORDER**

P/N **728115 Protection cap,** made of oil resistant rubber is useful against the accidental entry of water or foreign objects inside the cable reel.

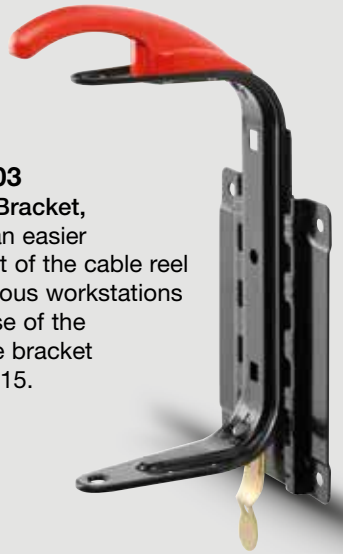

P/N **89003**
Bayonet Bracket,
it allows an easier movement of the cable reel in the various workstations
For the use of the adjustable bracket see page 15.

Cable reel Series 280
400 V THREE PHASE
without socket

Colour:
STANDARD RAL 1004

Structure:
Shockproof plastic material

Stop:
Automatic through rack

Protection degree of electrical part:
IP44 without protection cap
IP45 with protection cap
Attention: The system is downgraded depending on the IP valve of the connected components.

Fixing bracket:
Fixed / adjustable

Usage environment temperature:
-5°C / +40°C

CE

EN 61242

2006/95/CE 2004/108/CE
2011/65/UE

CABLE REEL - 400 V THREE PHASE							
Standard cable reel code	Number of conductors	Cable type	Cable length (m)	Cable inlet (m)	Max. power use (20°C)		Thermal protector
					Wound kW	*Unwound kW	
728A0.A41111	4	4G x 1 - H05 VV-F	11 + 1	1,2	1,1	2,3	YES
728A0.A42101	4	4G x 1,5 - H05 VV-F	10 + 1	1,2	1,4	4	YES
728A0.B42081	4	4G x 1,5 - H07 RN-F	8 + 1	1,2	1,4	4	YES
728A0.A43081	4	4G x 2,5 - H05 VV-F	8 + 1	1,2	2	6	YES
728A0.B43051	4	4G x 2,5 - H07 RN-F	5 + 1	1,2	2	6	YES
728A0.A51111	5	5G x 1 - H05 VV-F	11 + 1	1,2	1	2,3	YES
728A0.A52081	5	5G x 1,5 - H05 VV-F	8 + 1	1,2	1,4	4	YES
728A0.B52071	5	5G x 1,5 - H07 RN-F	7 + 1	1,2	1,4	4	YES

⚠ The following codes are considered devoid of accessories: Rewinding clutch - Protection cap - Bayonet bracket.

* The values are intended with cable completely unwound.

OVERALL DIMENSIONS **NORMAL**

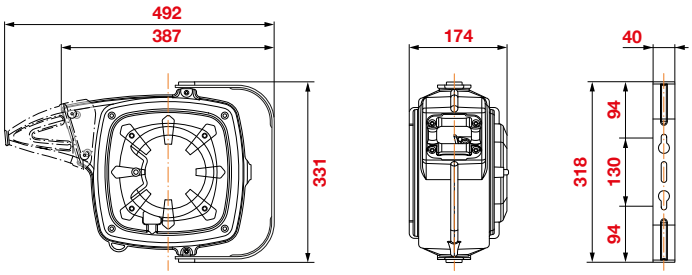

N°1 packing m³ 0,043 from kg 6,4 to 8,4

N°48 packages per pallet

OVERALL DIMENSIONS WITH **BRACKET**

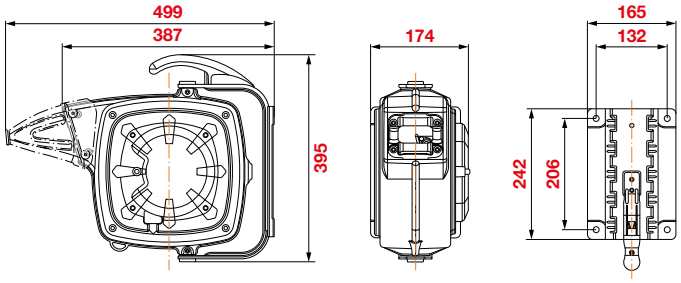

N°1 packing m³ 0,043 from kg 7,0 to 9,0

N°48 packages per pallet

How to customize the cable reel

All cable reel codes shown on the table on the opposite page are not provided with clutch, protection cover and bayonet bracket. (see accessories description on page 15). **To equip the cable reel with one or more of the above-mentioned accessories you need to modify the code as described in the table below.**

⚠ All other technical characteristics are not subject to customization

Example of standard code as indicated in the table on page 20

728	A	0	.	A	4	1	11	1

↑ **Accessories** ↓

		0	1	2	3	4	5	6	7
REWINDING CLUTCH	SPEED CONTROL	NO	YES	NO	NO	YES	YES	NO	YES
PROTECTION CAP		NO	NO	YES	NO	YES	NO	YES	YES
BAYONET BRACKET		NO	NO	NO	YES	NO	YES	YES	YES

Customizing the cable reel: for example, if you are interested to the cable reel **728A0.A41111** but equipped with **clutch** and **protection cap** you will have to put number 4 instead of 0 so that the final code of the cable reel will be **728A4.A41111**

The version equipped with a **clutch** that allows rewinding the cable at a controlled rate, is characterized by the plate **"SPEED CONTROL"**

⚠ **TO BE REQUESTED WITH THE ORDER**

P/N **728115 Protection cap,** made of oil resistant rubber is useful against the accidental entry of water or foreign objects inside the cable reel.

P/N **89003**
Bayonet Bracket,
it allows an easier movement of the cable reel in the various workstations
For the use of the adjustable bracket see page 15.

Cable reel Series 280
230 V SINGLE PHASE

with socket and SCHUKO plug IP44

Colour:
STANDARD RAL 1004

Structure:
Shockproof plastic material

Stop:
Automatic through rack

Protection degree of electrical part:
IP44 without protection cap
IP45 with protection cap
Attention: The system is downgraded depending on the IP valve of the connected components.

Fixing bracket:
Fixed / adjustable

Usage environment temperature:
-5°C / +40°C

CE

EN 61242

2006/95/CE 2004/108/CE
2011/65/UE

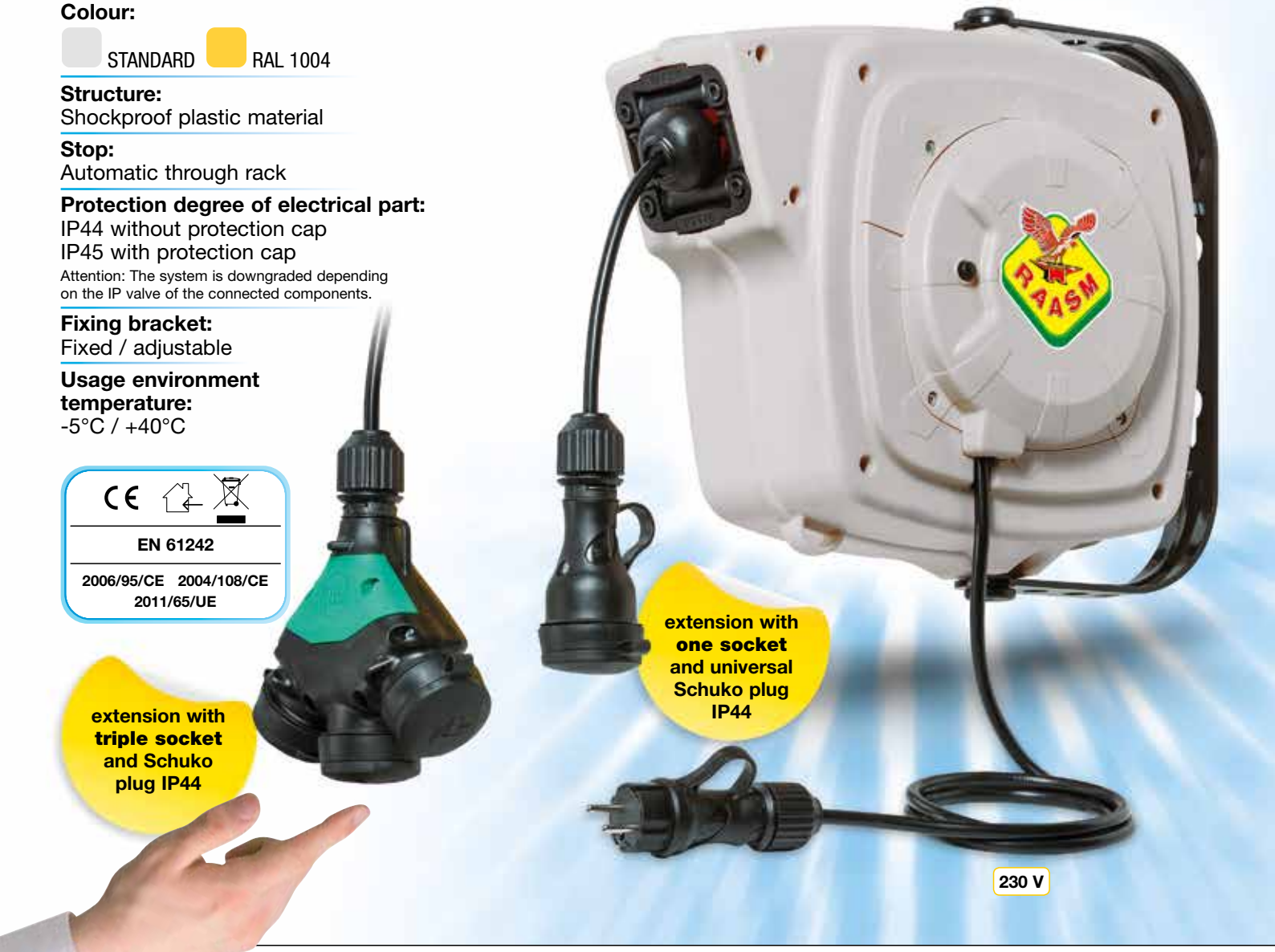

CABLE REEL - 230 V SINGLE PHASE with socket and Schuko plug							
Standard cable reel code	Number of conductors	Cable type	Cable length (m)	Cable inlet (m)	Max. power use (20°C)		Thermal protector
					Wound kW	*Unwound kW	
728A0.A32142	3	3G x 1,5 - H05 VV-F	14 + 1	1,2	1,2	2,3	YES

CABLE REEL - 230 V SINGLE PHASE with triple socket and Schuko plug							
Standard cable reel code	Number of conductors	Cable type	Cable length (m)	Cable inlet (m)	Max. power use (20°C)		Thermal protector
					Wound kW	*Unwound kW	
728A0.A32143	3	3G x 1,5 - H05 VV-F	14 + 1	1,2	1,2	2,3	YES

⚠ The following codes are considered devoid of accessories: Rewinding clutch - Protection cap - Bayonet bracket.

* The values are intended with cable completely unwound.

OVERALL DIMENSIONS **NORMAL**

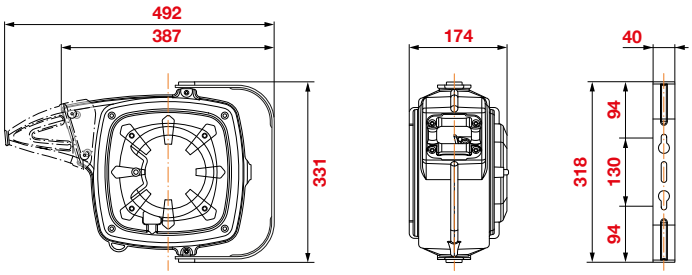

N°1 packing m³ 0,043 from kg 6,6 to 8,8

N°48 packages per pallet

OVERALL DIMENSIONS WITH **BRACKET**

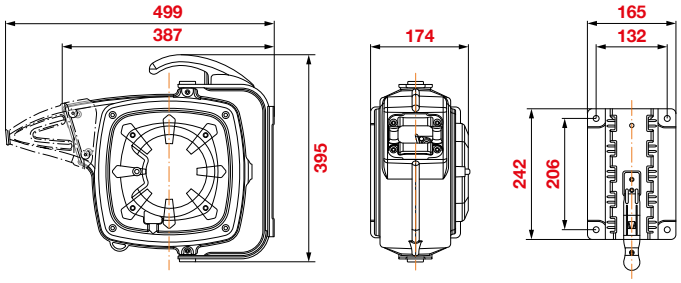

N°1 packing m³ 0,043 from kg 7,2 to 9,4

N°48 packages per pallet

How to customize the cable reel

All cable reel codes shown on the table on the opposite page are not provided with clutch, protection cover and bayonet bracket. (see accessories description on page 15). **To equip the cable reel with one or more of the above-mentioned accessories you need to modify the code as described in the table below.**

⚠ All other technical characteristics are not subject to customization

Example of standard code as indicated in the table on page 22

728	A	0	.	A	3	2	14	2

↑ **Accessories** ↓

		0	1	2	3	4	5	6	7
REWINDING CLUTCH	SPEED CONTROL	NO	YES	NO	NO	YES	YES	NO	YES
PROTECTION CAP		NO	NO	YES	NO	YES	NO	YES	YES
BAYONET BRACKET		NO	NO	NO	YES	NO	YES	YES	YES

Customizing the cable reel: for example, if you are interested to the cable reel **728A0.A32142** but equipped with **clutch** and **protection cap** you will have to put number 4 instead of 0 so that the final code of the cable reel will be **728A4.A32142**

The version equipped with a **clutch** that allows rewinding the cable at a controlled rate, is characterized by the plate **"SPEED CONTROL"**

⚠ **TO BE REQUESTED WITH THE ORDER**

P/N **728115 Protection cap,** made of oil resistant rubber is useful against the accidental entry of water or foreign objects inside the cable reel.

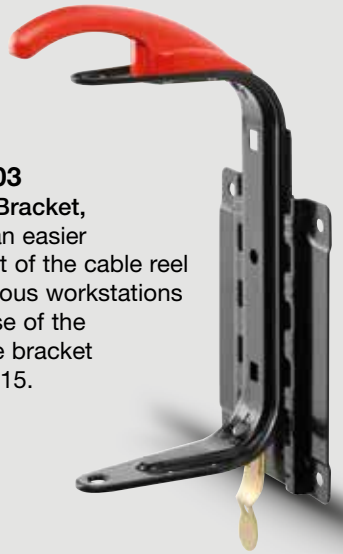

P/N **89003**
Bayonet Bracket,
it allows an easier movement of the cable reel in the various workstations
For the use of the adjustable bracket see page 15.

Cable reel Series 280
without transformer

with fluorescent portable lamp 11W
Series F230 - F12 - F24

Colour:
STANDARD RAL 1004

Structure:
Shockproof plastic material

Stop:
Automatic through rack

Protection degree of electrical part:
IP44 without protection cap
IP45 with protection cap
Attention: The system is downgraded depending on the IP valve of the connected components.

Fixing bracket:
Fixed / adjustable

Usage environment temperature:
-5°C / +40°C

CE

EN 61242 CEI.EN.60598

2006/95/CE 2004/108/CE
2011/65/UE UE.874/2012

ENERGY SAVER

LED LIGHT 3,6 W = 11 W = 50 W
600 LUMEN
6400-6500 °K

IP 65

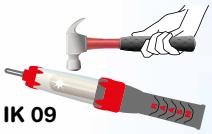
IK 09

CABLE REEL Series 280						LAMP Series F230 - F12 - F24				
Standard cable reel code	Number of conduc-tors	Cable type	Cable length (m)	Cable inlet (m)	Inlet voltage	Lamp power supply voltage	Lamp con-nection	Max power W	Lamp pro-tection degree	Light bulb supplied
728A0.C21145	2	2 x 1 - H05 RN-F	14 + 1	1,2	230 V AC-50 Hz	230 V AC-50 Hz	E27	11	IP65	P/N 728001
728D0.C21145	2	2 x 1 - H05 RN-F	14 + 1	1,2	12 V DC	12 V DC	E27	11	IP65	P/N 728002
728E0.C21145	2	2 x 1 - H05 RN-F	14 + 1	1,2	24 V DC	24 V DC	E27	11	IP65	P/N 728003

⚠ The following codes are considered devoid of accessories: Rewinding clutch - Protection cap - Bayonet bracket.

⚠ All the models can be supplied with light bulbs belonging to energetic efficiency class B, A and A+ in accordance with European regulation UE.874/2012. Fluorescent light bulbs can be replaced only with same energetic efficiency class.

⚠ **Feed the cable reel exclusively with the correct voltage of the lamp.** Using it with different voltages irremediably damages the lamp, and invalidate any warranty.

LIGHT BULBS **AVAILABLE**

P/N **728001** Light bulb 11W 230 V AC-50 Hz
P/N **728002** Light bulb 11W 12 V DC
P/N **728003** Light bulb 11W 24 V DC

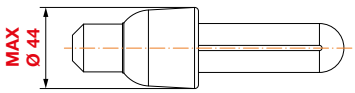

OVERALL DIMENSIONS **NORMAL**

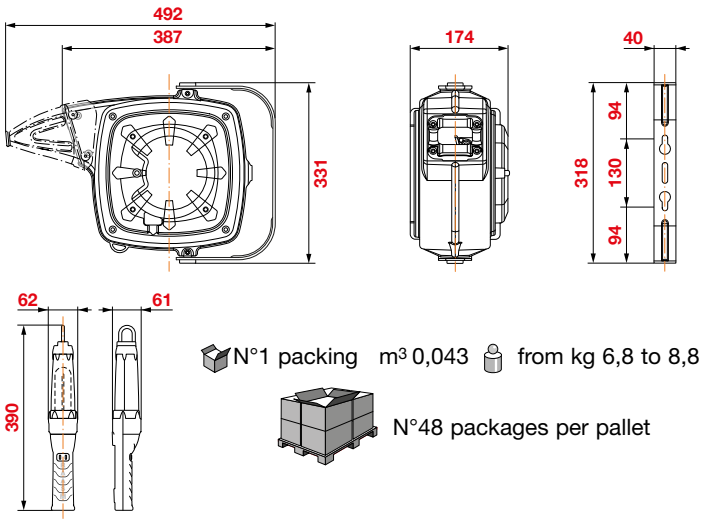

N°1 packing m³ 0,043 from kg 6,8 to 8,8

N°48 packages per pallet

OVERALL DIMENSIONS WITH **BRACKET**

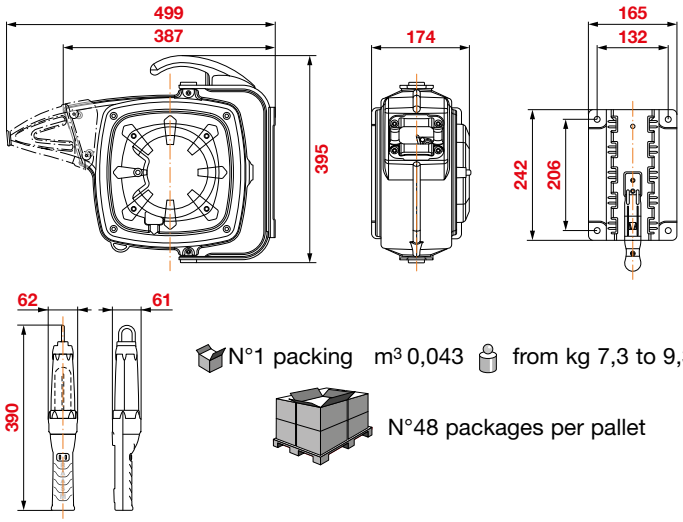

N°1 packing m³ 0,043 from kg 7,3 to 9,3

N°48 packages per pallet

How to customize the cable reel

All cable reel codes shown on the table on the opposite page are not provided with clutch, protection cover and bayonet bracket. (see accessories description on page 15). **To equip the cable reel with one or more of the above-mentioned accessories you need to modify the code as described in the table below.** ⚠ All other technical characteristics are not subject to customization

Example of standard code as indicated in the table on page 24

728	A	0	.	C	2	1	14	5

↑ **Accessories** ↓

		0	1	2	3	4	5	6	7
REWINDING CLUTCH	SPEED CONTROL	NO	YES	NO	NO	YES	YES	NO	YES
PROTECTION CAP		NO	NO	YES	NO	YES	NO	YES	YES
BAYONET BRACKET		NO	NO	NO	YES	NO	YES	YES	YES

Customizing the cable reel: for example, if you are interested to the cable reel **728A0.C21145** but equipped with **clutch** and **protection cap** you will have to put number 4 instead of 0 so that the final code of the cable reel will be **728A4.C21145**

The version equipped with a **clutch** that allows rewinding the cable at a controlled rate, is characterized by the plate **"SPEED CONTROL"**

⚠ **TO BE REQUESTED WITH THE ORDER**

P/N **728115 Protection cap,** made of oil resistant rubber is useful against the accidental entry of water or foreign objects inside the cable reel.

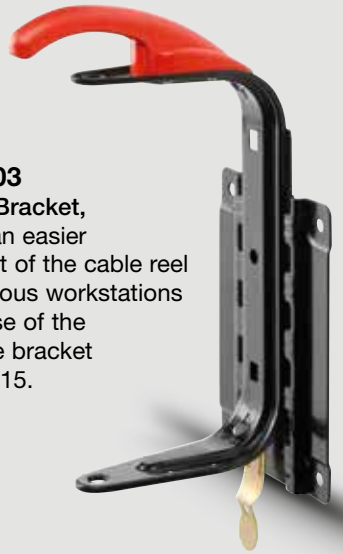

P/N **89003**
Bayonet Bracket,
it allows an easier movement of the cable reel in the various workstations
For the use of the adjustable bracket see page 15.

Cable reel Series 280
without transformer from 12 V to 24 V AC/DC
with led portable lamp
S. L1224

Colour:
STANDARD RAL 1004

Structure:
Shockproof plastic material

Stop:
Automatic through rack

Protection degree of electrical part:
IP44 without protection cap
IP45 with protection cap
Attention: The system is downgraded depending on the IP valve of the connected components.

Fixing bracket:
Fixed / adjustable

Usage environment temperature:
-5°C / +40°C

EN 61242 CEI.EN.60598
CEI.EN.62471
2006/95/CE 2004/108/CE
2011/65/UE UE.874/2012

ENERGY SAVER

LED LIGHT 3,6 W = 11 W = 50 W
360 LUMEN
5000 °K

IP 65

IK 09

CABLE REEL Series 280						LAMP Series L1224			
Standard cable reel code	Number of conduc-tors	Cable type	Cable length (m)	Cable inlet (m)	Inlet voltage	Lamp power supply voltage	Led holder unit power W	Lamp pro-tection degree	Led holder unit
728F0.C21144	2	2 x 1 - H05 RN-F	14 + 1	1,2	from 12 V to 24 V AC/DC	from 12 V to 24 V AC/DC	3,6	IP65	P/N 728005

⚠ The following codes are considered devoid of accessories: Rewinding clutch - Protection cap - Bayonet bracket.

⚠ All the models can be supplied with light bulbs belonging to energetic efficiency class A, A+ and A++ in accordance with European regulation UE.874/2012.

LED HOLDER UNIT

P/N **728005** Kit led holder unit, with 12 leds each of 0,3W.
Led holder unit cannot be replaced by others available in the market.

⚠ **Feed the cable reel exclusively with the correct voltage of the lamp.** Using it with different voltages irremediably damages the lamp, and invalidate any warranty.

OVERALL DIMENSIONS **NORMAL**

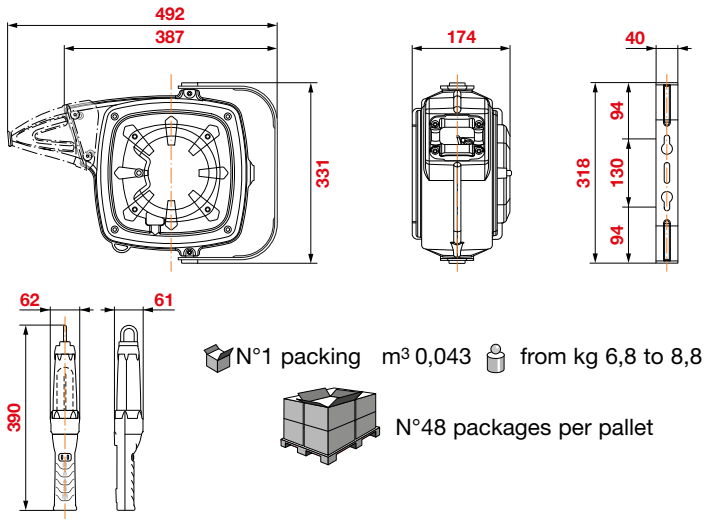

N°1 packing m³ 0,043 from kg 6,8 to 8,8

N°48 packages per pallet

OVERALL DIMENSIONS WITH **BRACKET**

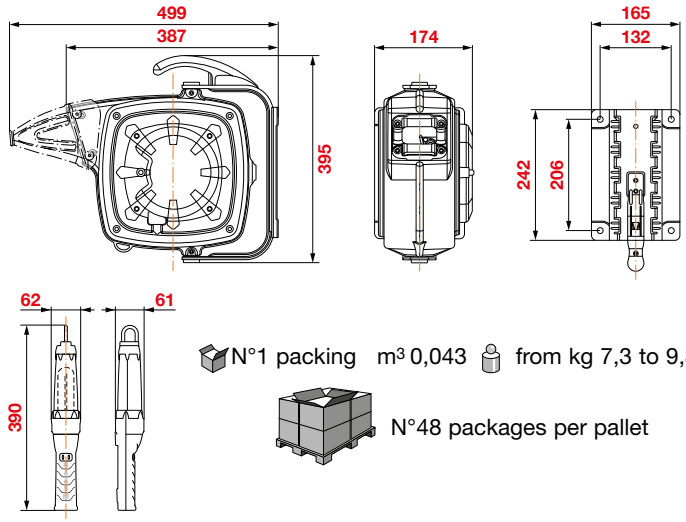

N°1 packing m³ 0,043 from kg 7,3 to 9,3

N°48 packages per pallet

How to customize the cable reel

All cable reel codes shown on the table on the opposite page are not provided with clutch, protection cover and bayonet bracket. (see accessories description on page 15). **To equip the cable reel with one or more of the above-mentioned accessories you need to modify the code as described in the table below.** ⚠ All other technical characteristics are not subject to customization

Example of standard code as indicated in the table on page 26

728	F	0	.	C	2	1	14	4

↑ **Accessories** ↓

		0	1	2	3	4	5	6	7
REWINDING CLUTCH	SPEED CONTROL	NO	YES	NO	NO	YES	YES	NO	YES
PROTECTION CAP		NO	NO	YES	NO	YES	NO	YES	YES
BAYONET BRACKET		NO	NO	NO	YES	NO	YES	YES	YES

Customizing the cable reel: for example, if you are interested to the cable reel **728F0.C21144** but equipped with **clutch** and **protection cap** you will have to put number 4 instead of 0 so that the final code of the cable reel will be **728F4.C21144**

The version equipped with a **clutch** that allows rewinding the cable at a controlled rate, is characterized by the plate **"SPEED CONTROL"**

⚠ **TO BE REQUESTED WITH THE ORDER**

P/N **728115 Protection cap,** made of oil resistant rubber is useful against the accidental entry of water or foreign objects inside the cable reel.

P/N **89003**
Bayonet Bracket,
it allows an easier movement of the cable reel in the various workstations
For the use of the adjustable bracket see page 15.

Cable reel Series 290
with transformer 230 V

with led portable lamp
S. L1224

Colour:
STANDARD RAL 1004

Structure:
Shockproof plastic material

Stop:
Automatic through rack

Protection degree of electrical part:
IP44 without protection cap
IP45 with protection cap
Attention: The system is downgraded depending on the IP valve of the connected components.

Fixing bracket:
Fixed / adjustable

Usage environment temperature:
-5°C / +40°C

24 V AC
50 Hz

EN 61242 CEI.EN.60598
CEI.EN.62471

2006/95/CE 2004/108/CE
2011/65/UE UE.874/2012

ENERGY SAVER

LED LIGHT 3,6 W = 11 W = 50 W
360 LUMEN
5000 °K

IP 65

IK 09

CABLE REEL Series 290						LAMP Series L1224			
Standard cable reel code	Number of conduc-tors	Cable type	Cable length (m)	Cable inlet (m)	Inlet voltage	Lamp power supply voltage	Led holder unit power W	Lamp pro-tection degree	Led holder unit
729A0.C21144	2	2 x 1 - H05 RN-F	14 + 1	1,2	230 V AC-50 Hz	from 12 V to 24 V AC/DC	3,6	IP65	P/N 728005

⚠ The following codes are considered devoid of accessories: Rewinding clutch - Protection cap - Bayonet bracket.

⚠ All the models can be supplied with light bulbs belonging to energetic efficiency class A, A+ and A++ in accordance with European regulation UE.874/2012.

LED HOLDER UNIT

P/N **728005** Kit led holder unit,
with 12 leds each of 0,3W.
Led holder unit cannot be replaced by others available in the market.

⚠ **Feed the cable reel exclusively with the correct voltage of the lamp.** Using it with different voltages irremediably damages the lamp, and invalidate any warranty.

OVERALL DIMENSIONS **NORMAL**

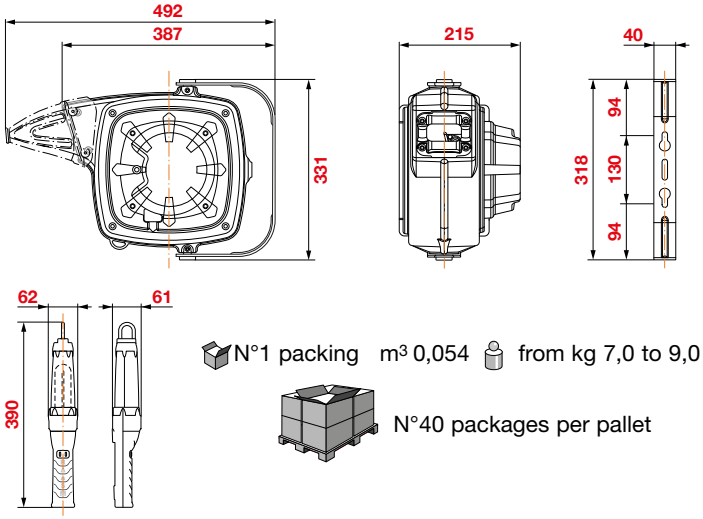

N°1 packing m³ 0,054 from kg 7,0 to 9,0

N°40 packages per pallet

OVERALL DIMENSIONS WITH **BRACKET**

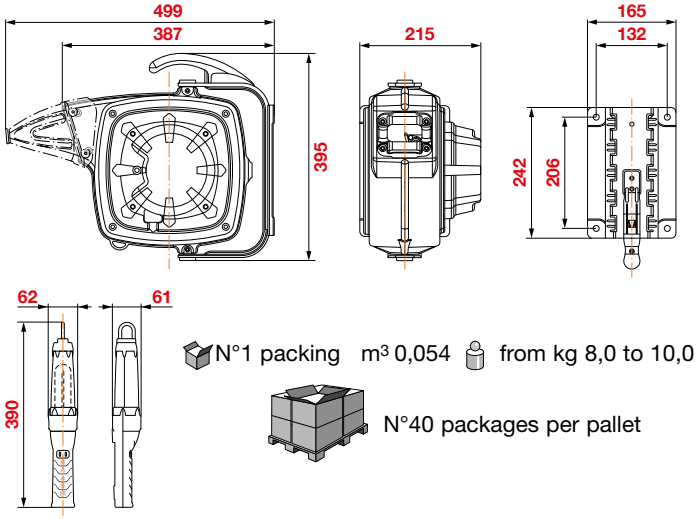

N°1 packing m³ 0,054 from kg 8,0 to 10,0

N°40 packages per pallet

How to customize the cable reel

All cable reel codes shown on the table on the opposite page are not provided with clutch, protection cover and bayonet bracket. (see accessories description on page 15). **To equip the cable reel with one or more of the above-mentioned accessories you need to modify the code as described in the table below.** ⚠ All other technical characteristics are not subject to customization

Example of standard code as indicated in the table on page 28

729	A	0	.	C	2	1	14	4

↑ **Accessories** ↓

		0	1	2	3	4	5	6	7
REWINDING CLUTCH	SPEED CONTROL	NO	YES	NO	NO	YES	YES	NO	YES
PROTECTION CAP		NO	NO	YES	NO	YES	NO	YES	YES
BAYONET BRACKET		NO	NO	NO	YES	NO	YES	YES	YES

Customizing the cable reel: for example, if you are interested to the cable reel **729A0.C21144** but equipped with **clutch** and **protection cap** you will have to put number 4 instead of 0 so that the final code of the cable reel will be **729A4.C21144**

The version equipped with a **clutch** that allows rewinding the cable at a controlled rate, is characterized by the plate **"SPEED CONTROL"**

⚠ **TO BE REQUESTED WITH THE ORDER**

P/N **728115 Protection cap,** made of oil resistant rubber is useful against the accidental entry of water or foreign objects inside the cable reel.

P/N **89003**
Bayonet Bracket,
it allows an easier movement of the cable reel in the various workstations
For the use of the adjustable bracket see page 15.

LAMPS

FLUORESCENT LAMP
Series **F230 - F12 - F24**

LED LAMP
Series **L1224**

LAMPS PRESENTATION

RAASM, portable lamps are strong and ideal for use in many fields of application.
The adjustable hook and magnetic support allow their correct positioning in any situation.
Depending on the model, they emit yellow or white light without generating heat and guarantee a large area of uniform illumination that ensures a large visual field.

advantages

- **Longer service** life than a classic incandescent light bulb.
- **Increased light output.**
- **Emits light at 5000° K,** comparable with the sun light (led version).
- **Light diffusor** to make uniform the led's beam.
- **Lower heating.**
- **Lower energy consumption.**
- **Easy positioning thanks** to the swivelling hook and the magnetic support.
- **Switch protected** from accidental actuation.
- **Bicomponent non-slip handgrip.**

The model with fluorescent lamp is supplied with light bulb.
Fluorescent portable lamp that fits only energy saving light bulbs E27 max 11W.

WARNING

TECHNICAL CHARACTERISTICS

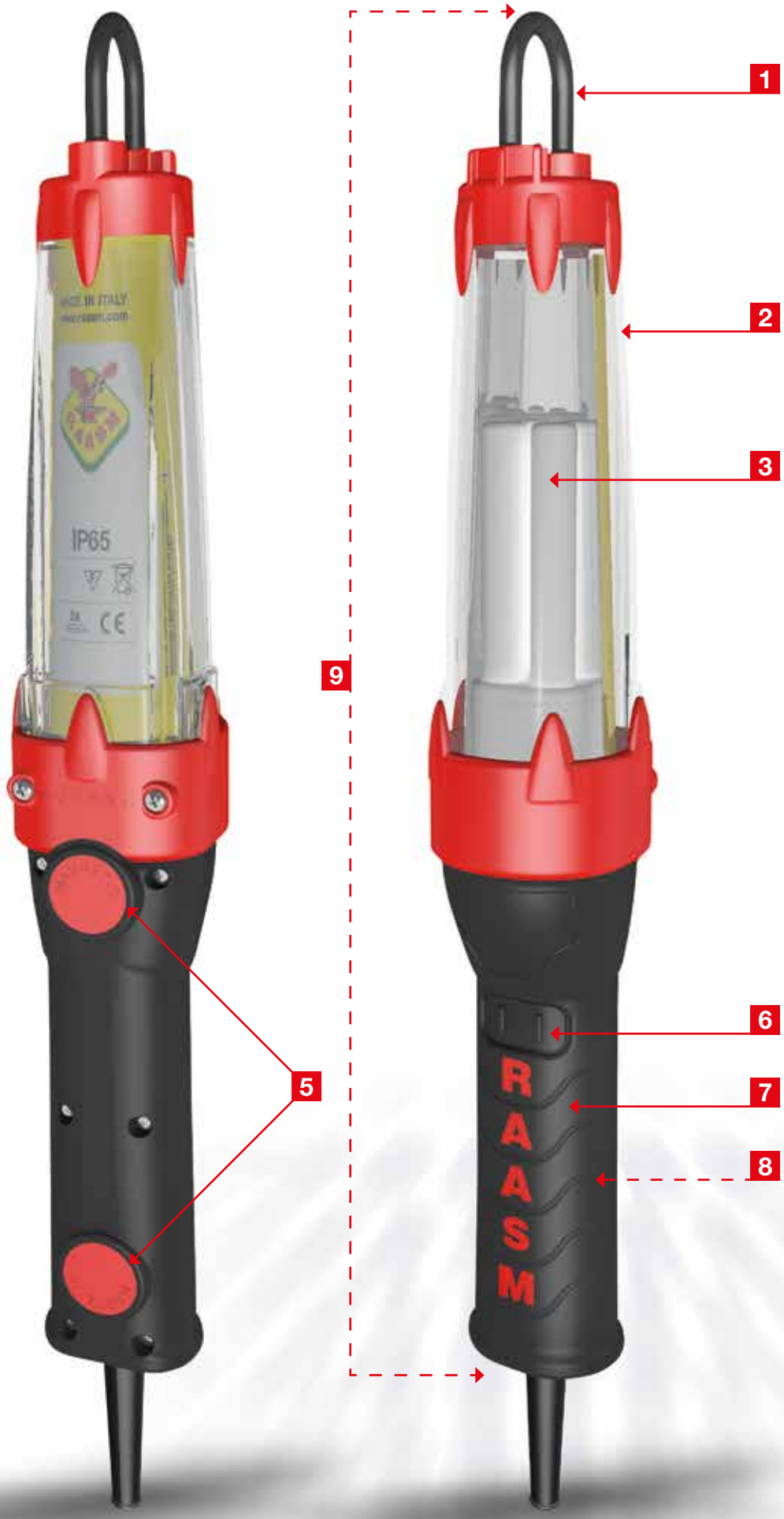

1 ADJUSTABLE HOOK
360° rotating, with locking loop device, allows to securely hook the lamp to various types of supports.
The innovative closed loop system ensures a safe hooking also on moving equipment.

2 TRANSPARENT PROTECTION COVER
In high resistance polymer, it protects the lamp from accidental shocks and against entry of dust, dirt and liquids. Replaceable screen.

3 FLUORESCENT LIGHT BULB 11W
For voltages from 12 V DC - 24 V DC - 230 V AC-50 Hz.
Series F280 - F12 - F24

4 LED HOLDER UNIT
For voltages from 12 V AC/DC a 24 V AC/DC.
It includes 12 white LEDS (5000 °K) for a total of 3,6 W.
Easily replaceable. Series L1224

5 MAGNETIC SUPPORT
Integrated in the handgrip, allows the adhesion of the lamp to any surface. This simple and practical device is useful when there are no holds for the hook of the lamp.

6 PROTECTED SWITCH
Incorporated inside the handle grip, it is protected from accidental shocks and against entry of dust, dirt and liquids.

7 HANDGRIP
In anti-skidding bicomponent, it allows a rapid and safe grip of the lamp.

8 PROTECTION FUSE
2 A, electrically protects the lamp from eventual short circuits.
In the fluorescent lamp version is user replaceable.

9 PROTECTION DEGREE
IP 65 - IK 09.

ITALIAN PRODUCT

Guarantee and quality of the components are our priority!

Portable lamp Series F230 - F12 - F24
supplied with fluorescent bulb of:
12 V DC - 24 V DC - 230 V AC

Technical characteristics:

- Swivelling hook
- Magnetic support
- Transparent replaceable protection cover
- Fluorescent light bulb 11W
- Protection degree IP65
- Anti-skidding grip
- Protected switch

F230

CE 2A

EN 60598-1 EN 60598-2-8

2006/95/CE 2004/108/CE
2011/65/UE UE874/2012

F12 - F24

CE III 2A

EN 60598-1 EN 60598-2-8

2006/95/CE 2004/108/CE
2011/65/UE UE874/2012

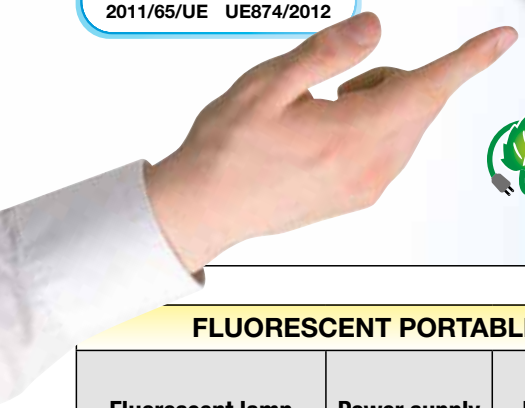

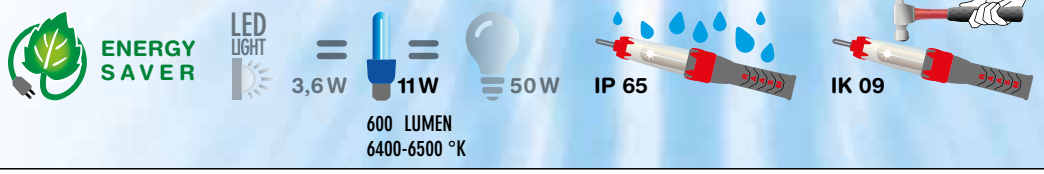

FLUORESCENT PORTABLE LAMP Series F230-F12-F24

Fluorescent lamp code	Power supply voltage	Light bulb coupling	Max power W	Lamp pro-tection degree	Light bulb supplied
7F1.2301	230 V AC-50 Hz	E27	11	IP65	P/N 728001
7F1.1201	12 V DC	E27	11	IP65	P/N 728002
7F1.2401	24 V DC	E27	11	IP65	P/N 728003

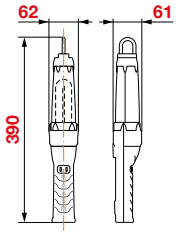

N°1 packing m³ 0,0057

kg 0,35

⚠ The above-mentioned codes refer to the lamp supplied without cable.

⚠ All the models can be supplied with light bulbs belonging to energetic efficiency class B, A and A⁺ in accordance with European regulation UE.874/2012. Fluorescent light bulbs can be replaced only with same energetic efficiency class.

⚠ **Feed the lamp exclusively with the correct voltage.** Using it with different voltages irremediably damages the lamp, and invalidate any warranty.

LIGHT BULBS AVAILABLE

P/N **728001** Light bulb 11W 230 V AC-50 Hz
P/N **728002** Light bulb 11W 12 V DC
P/N **728003** Light bulb 11W 24 V DC

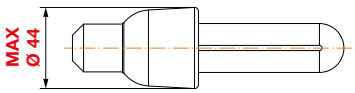

Portable lamp Series L1224
supplied with led holder unit:
from 12 V to 24 V AC/DC

Technical characteristics:

- Swivelling hook
- Magnetic support
- Transparent replaceable protection cover
- (12 leds) led holder unit
- Protection degree IP65
- Anti-skidding grip
- Protected switch

CE

EN 60598-1 EN 60598-2-8
CEI.EN.62471

2006/95/CE 2004/108/CE
2011/65/UE UE.874/2012

360 LUMEN
5000 °K

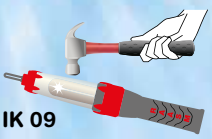

LED PORTABLE LAMP Series L1224					
LED lamp code	Power supply voltage	N° of LEDS	Led holder unit power W	Lamp pro-tection degree	LED holder unit
7L1.1301	from 12 V to 24 V AC/DC	12	3,6	IP65	P/N 728005

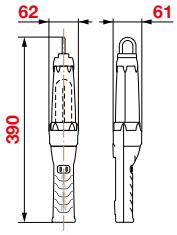

N°1 packing m³ 0,0057

kg 0,35

⚠ All the models can be supplied with light bulbs belonging to energetic efficiency class A, A+ and A++ in accordance with European regulation UE.874/2012.

LED HOLDER UNIT

P/N **728005** Kit led holder unit, with 12 leds each of 0,3W.
Led holder unit cannot be replaced by others available in the market.

⚠ **Feed the lamp exclusively with the correct voltage.** Using it with different voltages irremediably damages the lamp, and invalidate any warranty.

EARTHING CABLE REEL

PRESENTATION

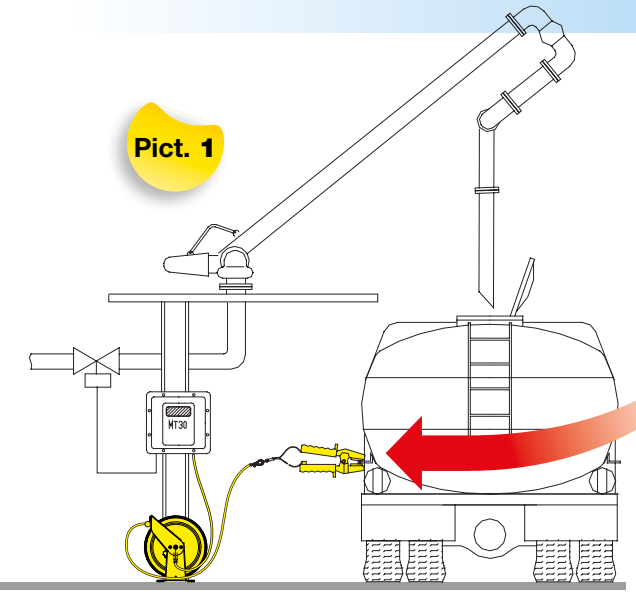

FUNCTIONING:
The assigned operator, before performing the transfer of the fluids, must connect the clamp on the end of the cable to the proper connecting plate obligatorily foreseen on all portable tanks **(pict. 1).**

The cable reel easily meets the need to ground the tanks containing flammable liquids during the operations of transfer in order to avoid the accumulation of dangerous electrostatic charges.

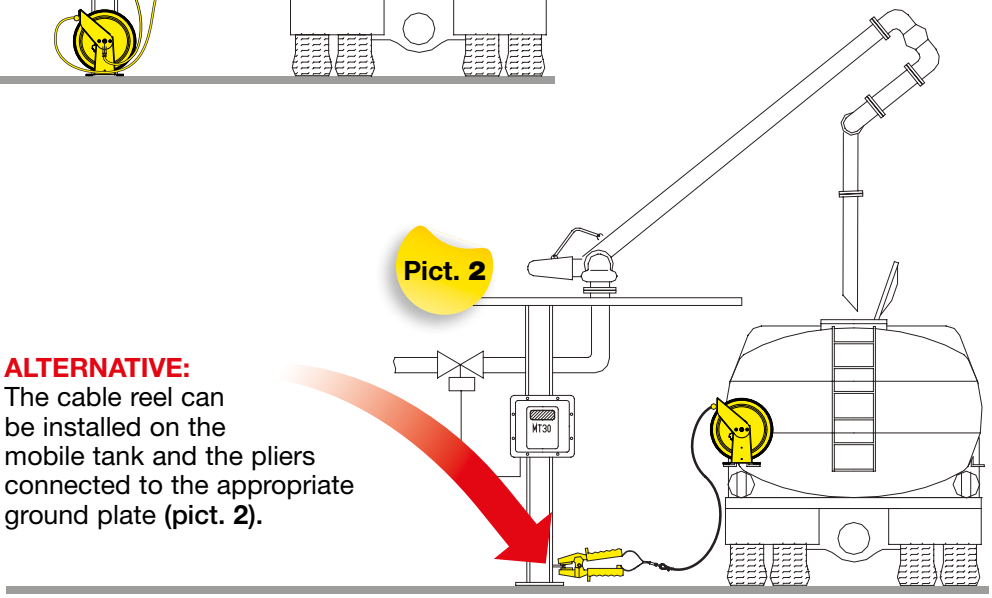

ALTERNATIVE:
The cable reel can be installed on the mobile tank and the pliers connected to the appropriate ground plate **(pict. 2).**

The cable reel Series 350 is marked according to Atex directive, category 3 (zone 2). The anti-deflagration pliers, standard on some models, can be placed instead in a potentially explosive area (zone 1) as indicated in the relative marking.

APPLICATION FIELDS

Deposits and refineries, aviation, tank trucks, naval

Enclosed cable reel Series 280
EARTHING

Colour:
STANDARD RAL 1004

Structure:
Shockproof plastic material

Stop:
Automatic through rack

Protection degree of electrical part:
IP44 without protection cap
IP45 with protection cap

Fixing bracket:
Fixed / adjustable

Usage environment temperature:
-5°C / +40°C

earthing pliers
100A P/N 735111

earthing pliers
50A P/N 735112

10A ANTI-DEFLAGRATION
earthing pliers

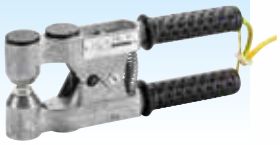

CE

EN 61242

2006/95/CE 2004/108/CE 2011/65/UE

EARTHING CABLE REEL S. 280						
Standard cable reel code	**Number of conductors**	**Cable type**	**Cable length (m)**	**Cable inlet (m)**	**Earthing pliers**	
728C0.E16151	1	1 x 6 - H07 V-K	15 + 1	1,2	without	
728C0.E17101	1	1 x 16 - H07 V-K	10 + 1	1,2	without	
728C0.E16157	1	1 x 6 - H07 V-K	15 + 1	1,2	50A	
728C0.E17108	1	1 x 16 - H07 V-K	10 + 1	1,2	100A	
728C0.G16146	1	1 x 6 - PUR	14,5	1,2	10A	

OVERALL DIMENSIONS **NORMAL**

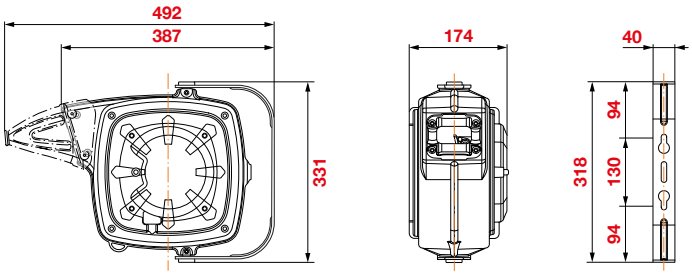

N°1 packing m³ 0,043 from kg 6,4 to 8,2

N°48 packages per pallet

OVERALL DIMENSIONS WITH **BRACKET**

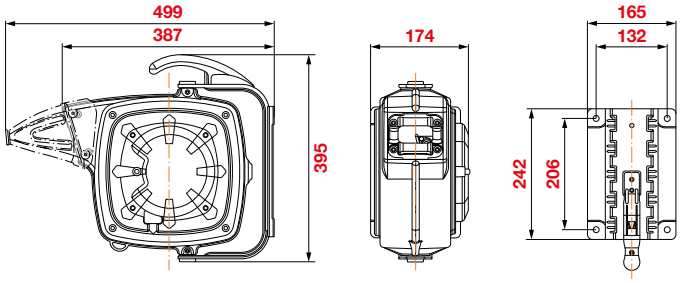

N°1 packing m³ 0,043 from kg 7,0 to 8,8

N°48 packages per pallet

How to customize the cable reel

All cable reel codes shown on the table on the opposite page are not provided with clutch, protection cover and bayonet bracket. (see accessories description on page 15). **To equip the cable reel with one or more of the above-mentioned accessories you need to modify the code as described in the table below.**

⚠ All other technical characteristics are not subject to customization

Example of standard code as indicated in the table on page 38

728	C	0	.	E	1	6	15	1

↑ **Accessories** ↓

		0	1	2	3	4	5	6	7
REWINDING CLUTCH	SPEED CONTROL	NO	YES	NO	NO	YES	SI	NO	YES
PROTECTION CAP		NO	NO	YES	NO	YES	NO	YES	YES
BAYONET BRACKET		NO	NO	NO	YES	NO	YES	YES	YES

Customizing the cable reel: for example, if you are interested to the cable reel **728C0.E16151** but equipped with **clutch** and **protection cap** you will have to put number 4 instead of 0 so that the final code of the cable reel will be **728C4.E16151**

The version equipped with a **clutch** that allows rewinding the cable at a controlled rate, is characterized by the plate **"SPEED CONTROL"**

⚠ **TO BE REQUESTED WITH THE ORDER**

P/N **728115 Protection cap,** made of oil resistant rubber is useful against the accidental entry of water or foreign objects inside the cable reel.

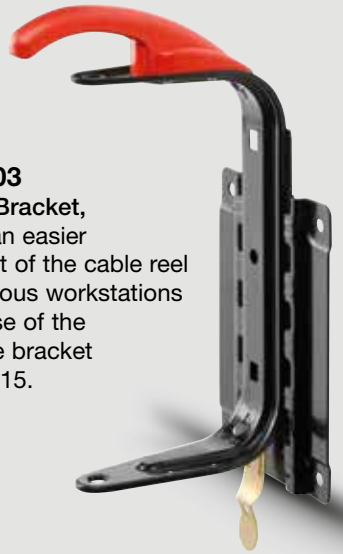

P/N **89003**
Bayonet Bracket,
it allows an easier movement of the cable reel in the various workstations
For the use of the adjustable bracket see page 15.

Cable reel Series 350
EARTHING

Colour:
STANDARD RAL 1004

Structure:
Painted steel

Stop:
Automatic through rack

Fixing bracket:
Fixed

Usage environment temperature:
-5°C / +40°C

Ex II 3 GD

earthing pliers
100A P/N **735111**

earthing pliers
50A P/N **735112**

10A ANTI-DEFLAGRATION
earthing pliers

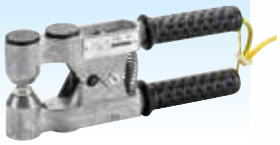

EARTHING CABLE REEL Series 350						
Standard cable reel code	Number of conductors	Cable type	Conducting cable material	Conducting cable insulation	Cable length (m)	Earthing pliers
735000	1	without cable	max cable capacity 30 m - cross section 16 mm^2			without
735131.60141	1	1 x 6	Copper	PUR	14,5	anti-deflagration 10A
735131.60261	1	1 x 6	Copper	PUR	26	anti-deflagration 10A
735131.60152	1	1 x 6	Copper	PUR	15	standard 50A
735131.60252	1	1 x 6	Copper	PUR	25	standard 50A
735141.60152	1	1 x 7	Steel	PVC	15	standard 50A
735141.60252	1	1 x 7	Steel	PVC	25	standard 50A

TECHNICAL CHARACTERISTICS

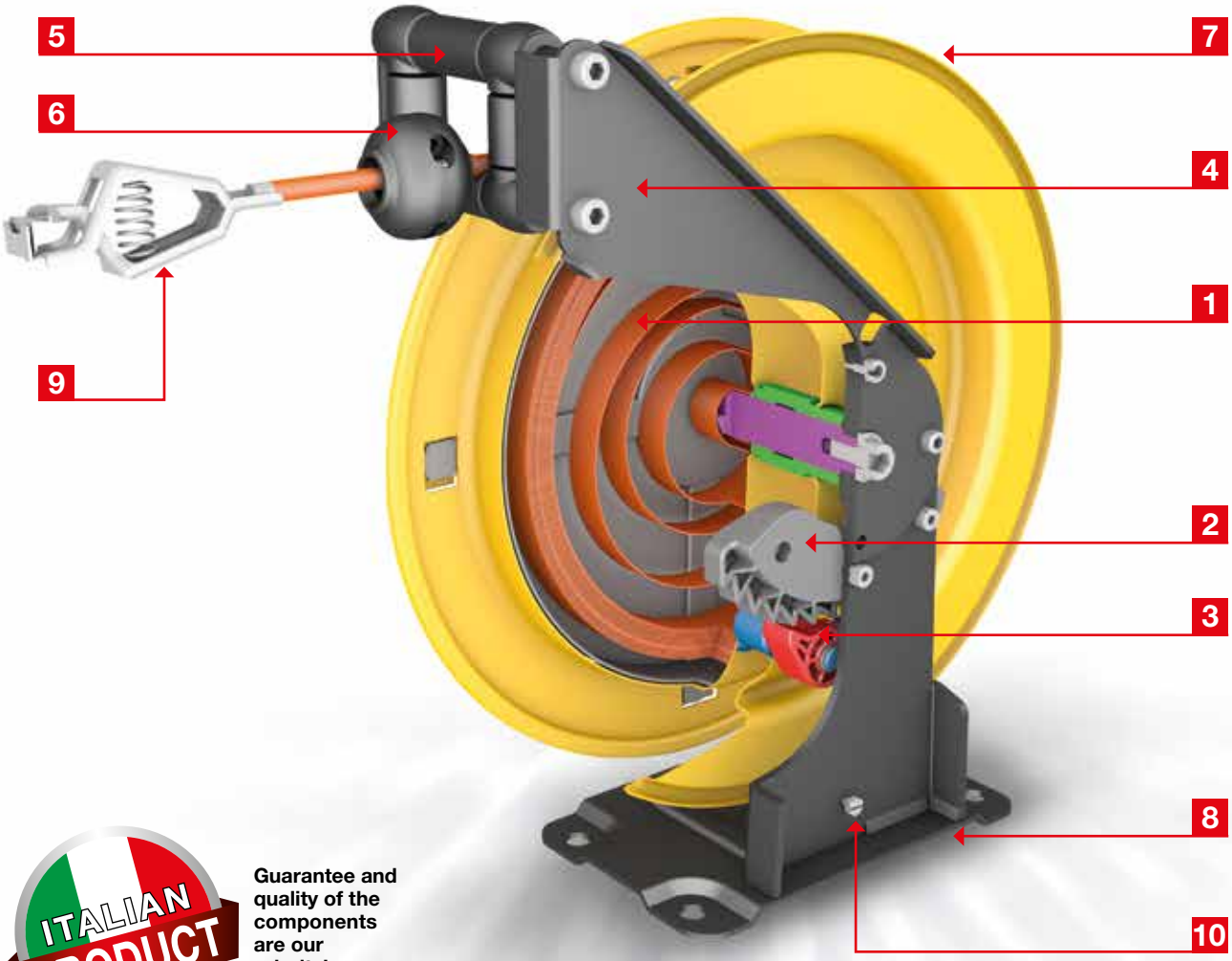

ITALIAN PRODUCT

Guarantee and quality of the components are our priority!

1 REWINDING SPRING
With constant force fully closed and protected.

2 STOP RACK
Allows the blocking of the cable to the wanted measure.

3 PAWL
Of increased thickness with reinforcement ribs to ensure high resistance to stresses. Actuated by a spring in stainless steel.

4 MULTI POSITION ARMS
To facilitate the release of the cable according to the installation of the cable reel.

5 SELF-LUBRICATING CABLE GUIDE ROLLERS
Wide omnidirectional nozzle.

6 CABLE CLAMP PAD
Adjustable.

7 CABLE REEL DRUM
Sturdy and practical with ribs and rounded edges.

8 HOOKING BRACKET
It is provided with four slotted holes that allow easy and safe installation.

9 EARTHING PLIERS
To eliminate the accumulation of electrostatic energy.

10 EARTHING CONNECTION

OVERALL DIMENSIONS

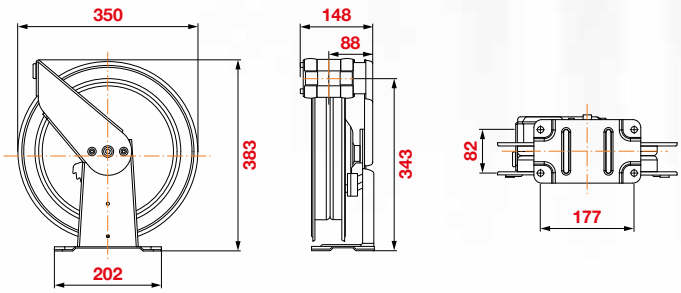

N°1 packing m³ 0,036 from kg 10,3 to 11,5

N°36 packages per pallet

HOSE REEL

Air-Water
20 bar
40 °C

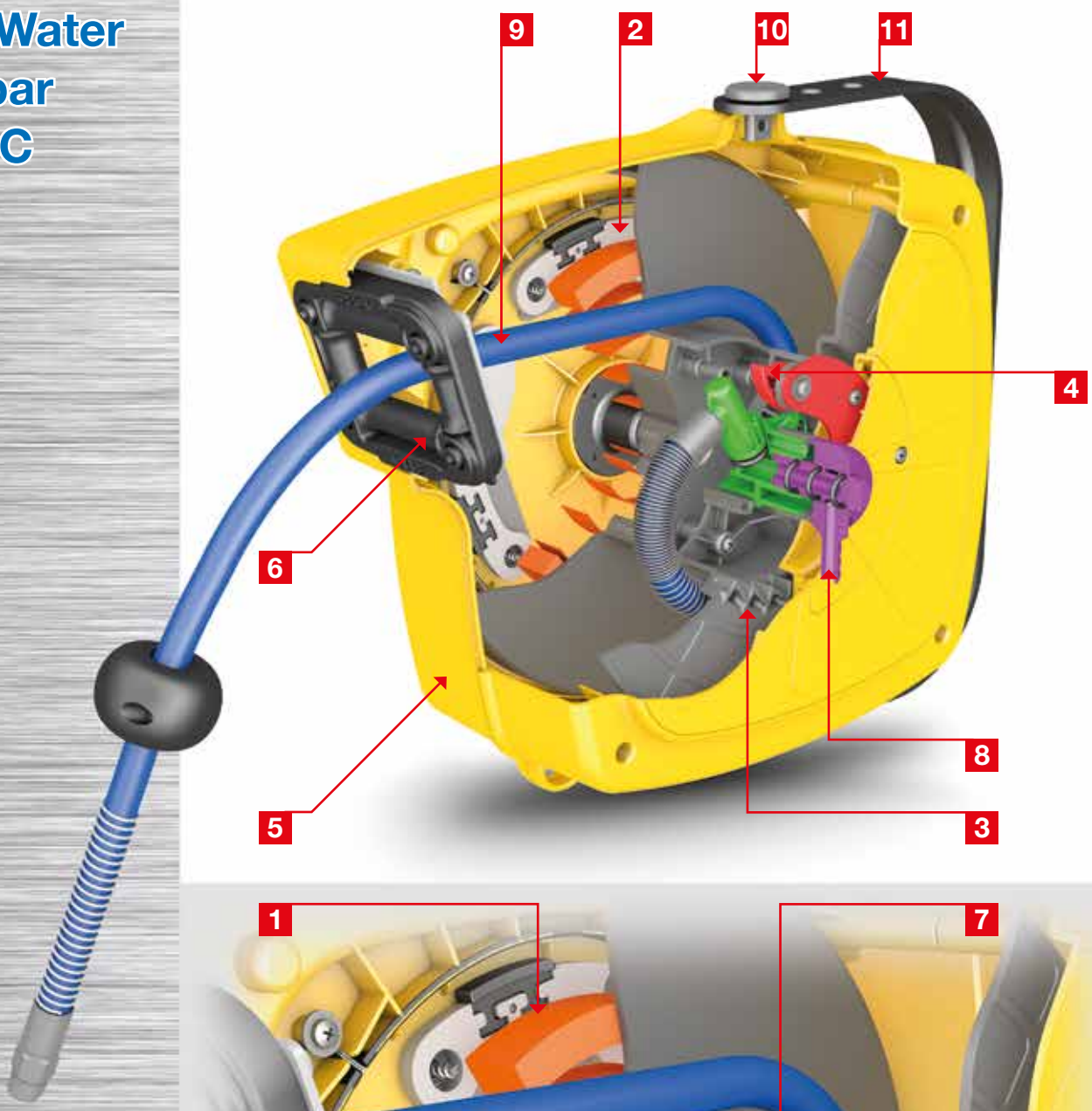

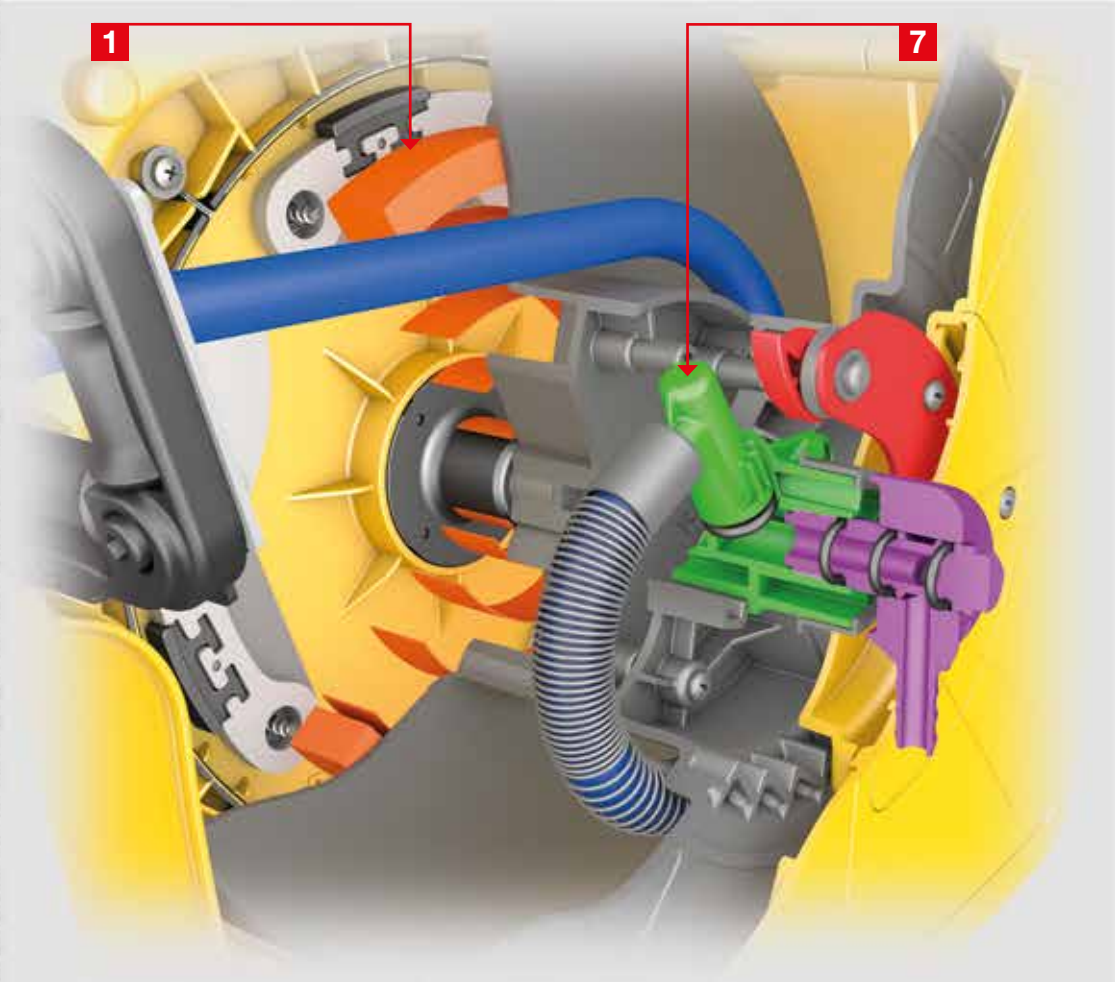

TECHNICAL CHARACTERISTICS

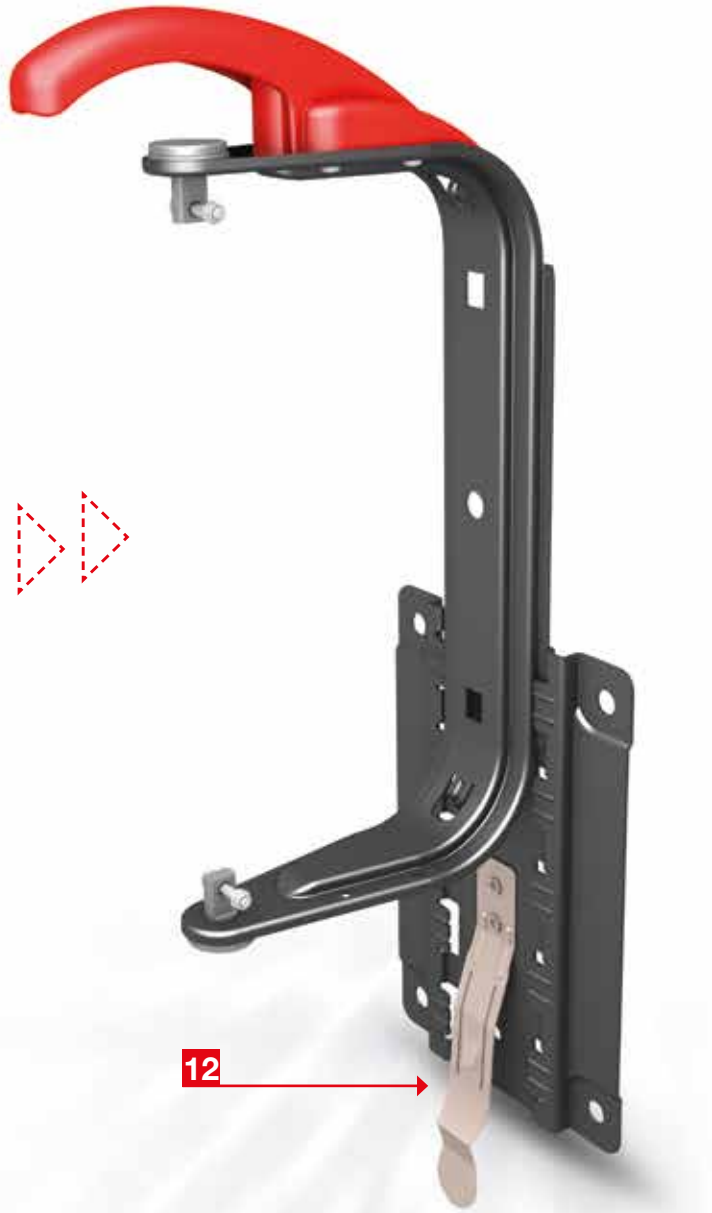

1 SPRING
Rewinding spring totally protected from the external environment. The spring is subjected to a durability test of 20000 cycles (each cycle corresponds to the complete unwinding and rewinding of the hose thus simulating an average life of over 10 years.
Possibility to intervene to adjust the spring force increasing or decreasing the preload.

2 REWINDING CLUTCH
Optional, devoid of complex and potentially wearing kinematic motions, allows the rewinding of the drum at a safe speed.

3 STOPPING RACK
It has an increased width and reinforcement ribs ensuring greater durability and sturdiness.

4 PAWL
Of increased thickness with reinforcing ribs ensuring high stress resistance and durability.

5 STRUCTURE
Strong and compact made of highly resistant shockproof material mechanical, designed to withstand over time.

6 HOSE GUIDE WITH ROLLERS
Sturdy and resistant with reinforced steel interior. Wide width which allows to guide properly the hose for correct rewind. Equipped with 4 rollers, 2 arranged horizontally (above and below) and 2 arranged vertically (left and right) that reduce hose wear.

7 FITTINGS AND CENTRAL PIN
Built in suitable material to withstand harsh products (Delrin®) and with passages dimensioned so as to avoid flow resistance.

8 ENTRY ARTICULATION
With internal passage properly sized to the used pipes. The 90° fitting can be oriented in eight different positions, 45° equitably spaced to facilitate the connection of the inlet hose (supplied).

9 HOSE
Polyurethane hose with hose stop pad and outlet articulation that ease the use of the pneumatic equipment (inflating guns, screwers, etc.) to which it is connected. Two metal coils positioned at either end of the hose are a safe reinforcement to its structure.

10 SIDE CLUTCH
The bracket is equipped with a special clutch that controls the rotational speed on the right and on the left of the hose reel.

11 ADJUSTABLE BRACKET
Adjustable up to 90° per side, of a sturdy structure with loop fixing holes that facilitate wall mounting.

12 BAYONET BRACKET
The bracket with bayonet type quick coupling is available as optional and it allows an easier movement of the hose reel in the various workstations.

ITALIAN PRODUCT

Guarantee and quality of the components are our priority!

Enclosed hose reel Series 280
Air-Water 20 bar / 40 °C

Colour:
STANDARD RAL 1004

Structure:
Shockproof plastic material

Stop:
Automatic through rack

Fixing bracket:
Fixed / adjustable

Usage environment temperature:
-5°C / +40°C

some examples of use

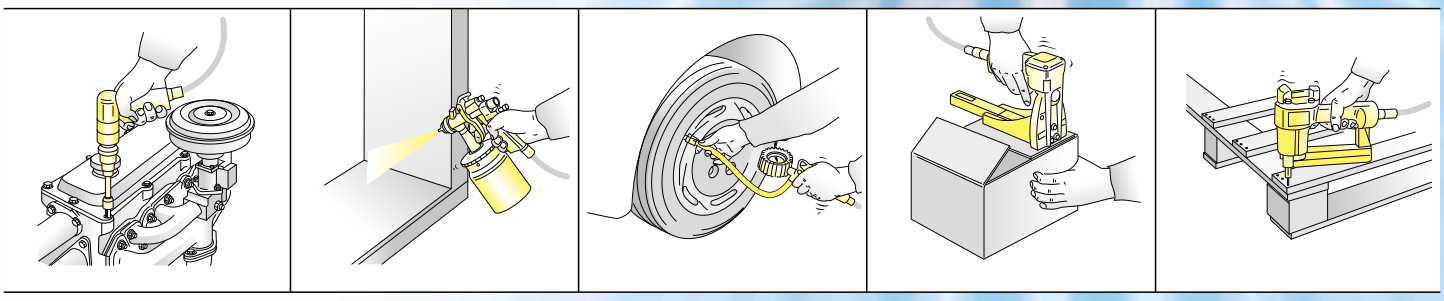

HOSE REEL Series 280				
Standard hose reel code	Hose length and ø	Coupling		Hose working temperature min/max
		inlet	outlet	
92808.101	10 m - 8x12 (971.110)	M 3/8"G	M 1/4"G	-15 °C / +65 °C
92808.102	14 m - 8x12 (971.114)	M 3/8"G	M 1/4"G	-15 °C / +65 °C
92808.105	8 + 1 m - 10x14,5 (972.109)	M 3/8"G	M 3/8"G	-15 °C / +65 °C

EQUIPPED WITH:

- swivel joint pipe outbound
- polyurethane hose (blue) with protection spring on fittings
- galvanized steel fittings
- brass joint
- seals in "viton"
- length in entrance 1,5 m

OUTPUT HOSE DETAIL

OVERALL DIMENSIONS **NORMAL**

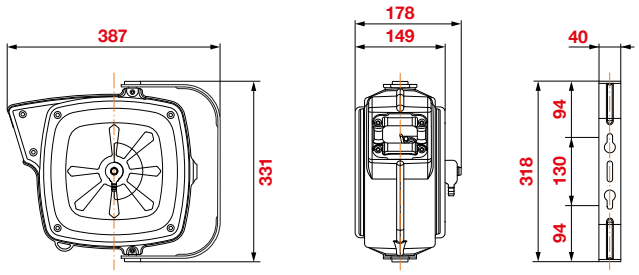

N°1 packing m³ 0,043 from kg 6,0 to 7,9

N°48 packages per pallet

OVERALL DIMENSIONS WITH **BRACKET**

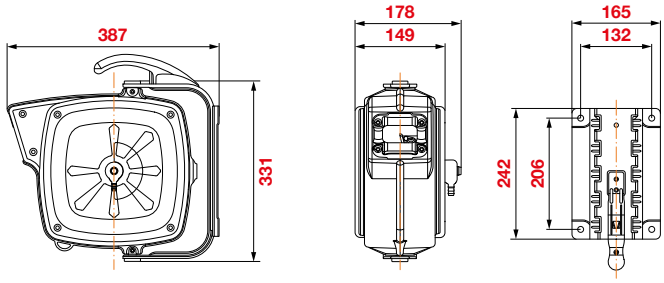

N°1 packing m³ 0,043 from kg 6,0 to 7,9

N°48 packages per pallet

How to customize the hose reel

All hose reels codes shown on the table on the opposite page are not provided with clutch, protection cover and bayonet bracket. (see accessories description on page 15). **To equip the hose reel with one or more of the above-mentioned accessories you need to modify the code as described in the table below.**

⚠ All other technical characteristics are not subject to customization

Example of standard code as indicated in the table on page 44

928	0	8	.	1	0	1

↑ **Accessories** ↓

		0	1	4	5
REWINDING CLUTCH	SPEED CONTROL	NO	NO	YES	YES
BAYONET BRACKET		NO	YES	NO	YES

Customizing the hose reel: for example, if you are interested to the hose reel **92808.101** but equipped with **clutch** you will have to put number 4 instead of 0 so that the final code of the hose reel will be **92848.101**

The version equipped with a **clutch** that allows rewinding the hose a controlled rate, is characterized by the plate **"SPEED CONTROL"**

⚠ **TO BE REQUESTED WITH THE ORDER**

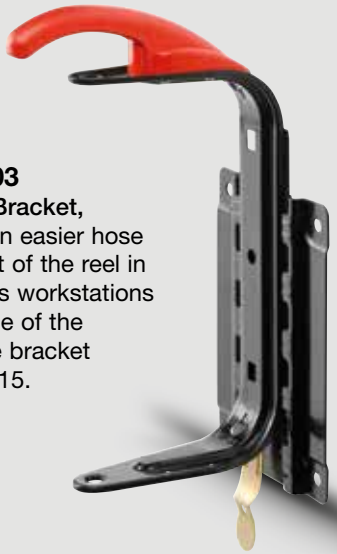

P/N **89003**
Bayonet Bracket,
it allows an easier hose movement of the reel in the various workstations
For the use of the adjustable bracket see page 15.

P/N **89001**
Wall bracket, to buy separately
in case you want to create multiple points for fitting the hose reel provided with bayonet bracket.

Product customization

RAASM offers the opportunity to order the products of its production in **2 different colours.**
The customer **without the constraints of minimum quantity, nor additional costs, can request the colour choosing from the proposed range.**
This customization concerns only the colour and **does not include:** instruction booklets, labels, brands, etc.
Delivery times for the colour that is not standard may vary.
Different colours, in addition to those available or other customizations, must be valued each time and will be bound to minimum quantities and additional costs.

AVAILABLE COLOURS

The products for which a customized colour is not specified, are supplied with standard grey colour as per catalogue

STANDARD

RAL 1004

To order an item with a **different colour from the standard,** the suffix: /**C2** for yellow colour **Ral 1004** must be added to the code

HELP THE NATURE

Packaging contains, depending on the articles, one or more of the following materials; they must be recycled in accordance with current regulations in the country of use.

cardboard • polyethylene sack • polystyrene paper • wood • nails • plastic strap cellophane • clips • gummed paper

RAASM contributes with an eco-contribution at the recycling and the disposal of the electrical and electronic equipments at the end of life. Producer's registry AEE N° IT14120000008678

The company **RAASM** S.p.A. holds the exclusive Intellectual Property rights on the **RAASM** trademark and all rights to its use and reproduction are reserved.
The **RAASM** trademark is a registered trademark and is protected at an international level. No part of the **RAASM** trademark and its logo may be utilized, copied and/or used in any form, time and space, even by means of improper alterations.

The Intellectual Property rights on the images published in this catalogue are owned exclusively by **RAASM** S.p.A. and any unauthorized reproduction is prohibited.

Any use in general of the assets protected by the Intellectual Property rights of **RAASM** S.p.A. is prohibited and is subject to the prior written permission of **RAASM** S.p.A.

ADVANCED FLUID MANAGEMENT SOLUTIONS

The manufacturer declines any responsibility for possible inaccuracies contained in this catalogue, due to printing or transcription errors.

The manufacturer reserves the right to make any changes or improvements of a functional, technical or aesthetic nature without prior notice.

THREE WORDS TO DESCRIBE RAASM

Technology

The starting point for the entire production cycle is the research and development of cutting-edge new solutions which lead to the development of **high quality products, fully produced in Italy.**

Quality

The quality of our product manufacturing has always been our absolute priority. To reach this goal rigorous testing accompanies every phase of the manufacturing process.

Functionality

RAASM offers the most complete range of lubrication products suited to many sectors.
Our aim is to always be available to provide solutions to our customers.

RAASM S.p.A.
36022 S. ZENO DI CASSOLA (VI)
Via Marangoni, 33 - ITALY

Export department
Tel. +39 0424 571130 - Fax 0424 571135
Technical department
Tel. +39 0424 571150 - Fax 0424 571155

info@raasm.com
www.raasm.com

GB

WRCAVVC2015-GB

Authorized distributor

All rights reserved to Raasm S.p.A.