Total Quality

Innovative design for optimising
the pump work cycle.
The result of years of research and development,
during which numerous tests were carried
out for thousands of work hours.

High quality materials used,
cutting-edge processes, hardening and
grinding for reducing internal
friction and limiting wear.

Fewer moving parts
for easy and occasional maintenance
with savings in running costs.

The industrial pumps guarantee high
efficiency in capacity and operating pressure.

Double action ensures a continuous and
constant flow of the fluid delivered.

Versatility

INTEGRAL INDUSTRIAL PUMPS

Air motor and pumping unit form a single body. They are recommended for transferring non-corrosive fluids, oil and allied products.

FLANGED INDUSTRIAL PUMPS

Air motor and pumping unit form a single body.
They are recommended for transferring non-corrosive fluids, oil and allied products.The motor base is flanged to enable application of the handles which are useful for easy moving and for simple fixing in various other applications.

DIVORCED INDUSTRIAL PUMPS

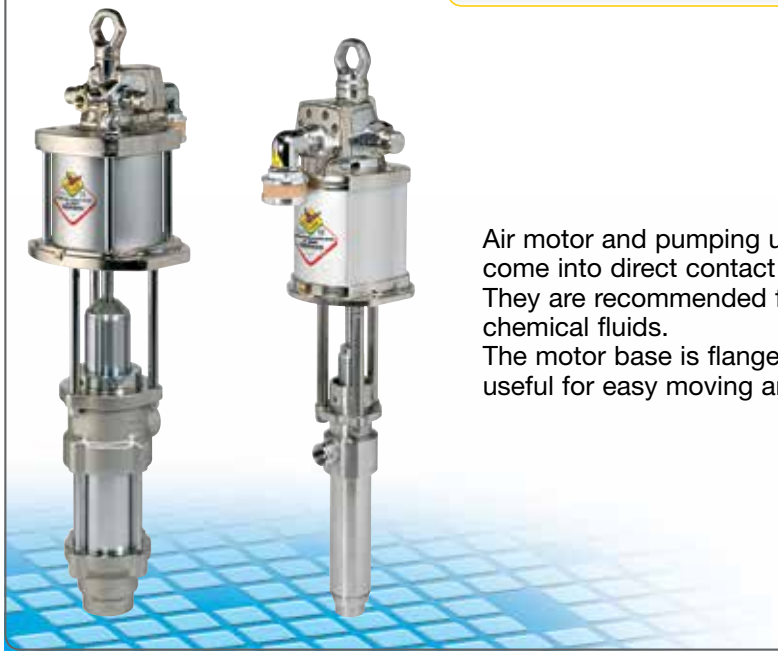

Air motor and pumping unit are separate so that the fluid cannot come into direct contact with the motor body.
They are recommended for transferring non-aggressive industrial and chemical fluids.
The motor base is flanged to enable application of the handles which are useful for easy moving and for simple fixing in various other applications.

The **integral pumps** and **flanged pumps** are available in the drum version and modular version (modular = extendable with a rigid suction tube, or in the wall application with a flexible suction tube)

Examples of industrial pump applications

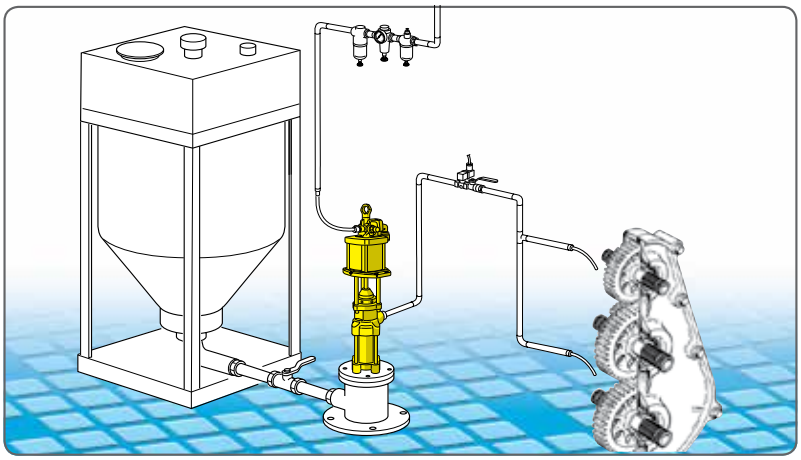

Stations for continuous feed of machinery by means of distribution of fluids in line (lubricants, inks, adhesives, etc.) with pump connected to the tank or fixed to the floor with bracket.

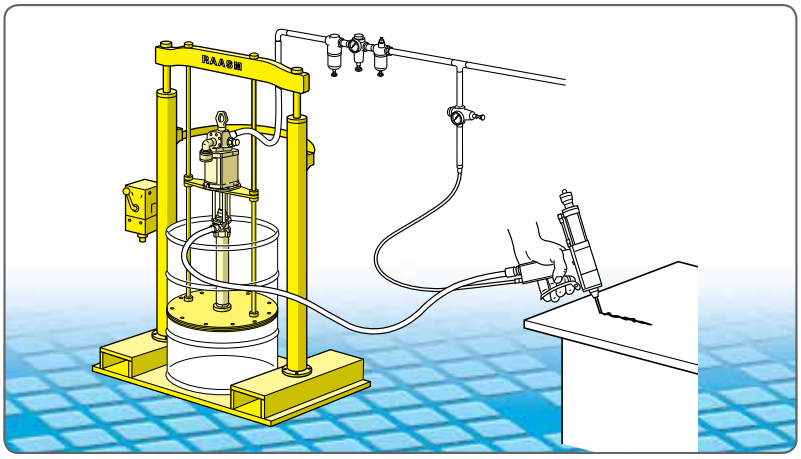

Automated system for the delivery of preselected quantities of fluids (inks, paints, greases, etc.), fed by pumps mounted on drum, with lift.

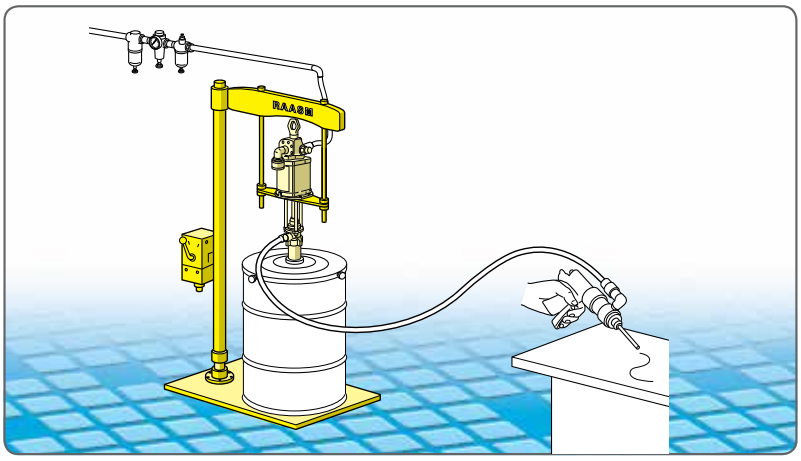

Application of sealants, adhesives, greases, etc., by means of special delivery gun fed by pump mounted on drum in fixed or mobile station.

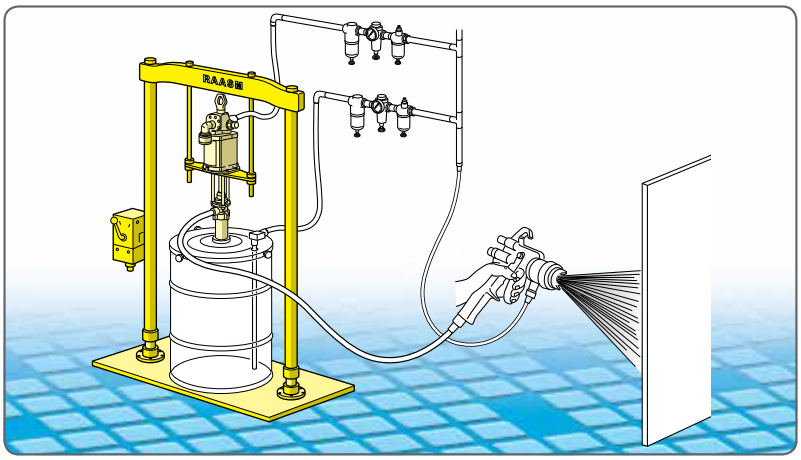

Fluid distribution system (for paints, lubricants, protective liquids, etc.) fed by pump mounted on drum in fixed station and delivery with spray gun.

Industrial pump installations on tanks or drums

For tank with pump in vertical position mounted on bracket

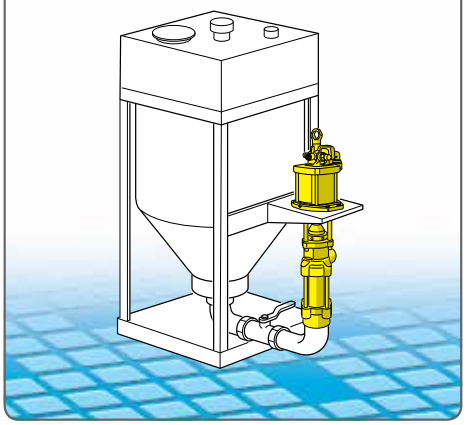

For tank with pump in vertical position mounted on floor with bracket

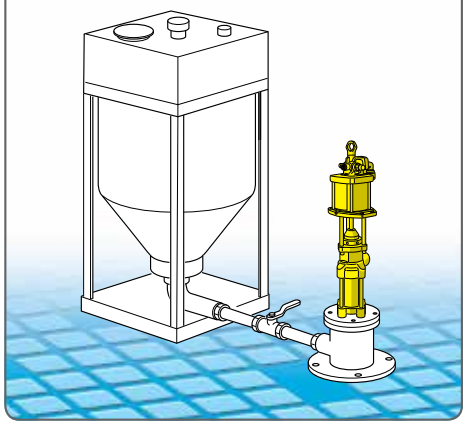

For tank with pump in horizontal position

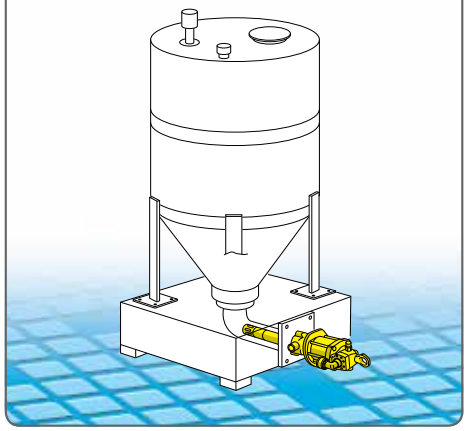

For tank with pump in inclined position

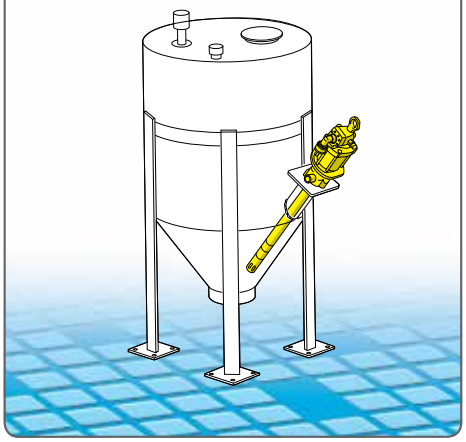

For 200 kg drum, with double ram hoist and follower

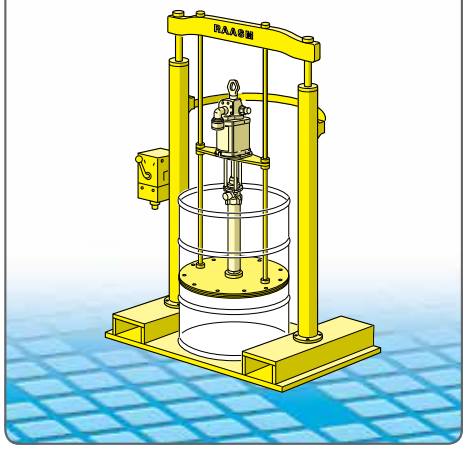

For 200 kg drums, standard application

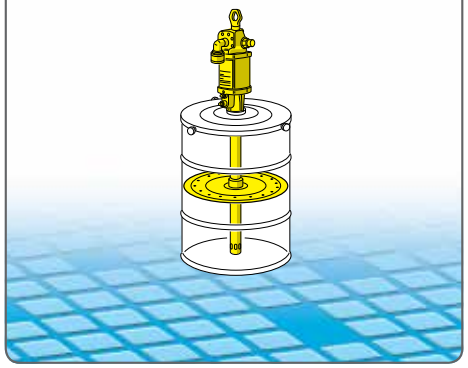

Industrial pumps installed on vertical bulk containers

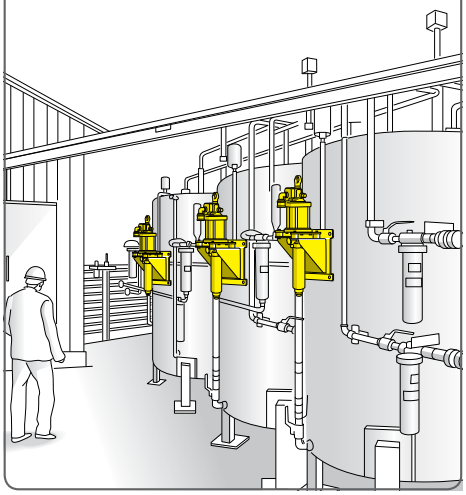

Industrial pumps installed on pedestals connected to horizontal bulk containers

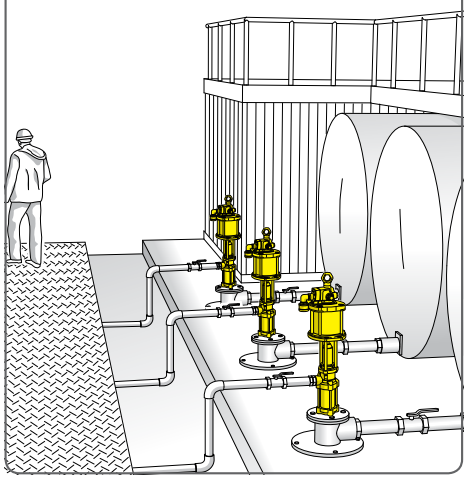

Bank of pumps connected with bulk containers

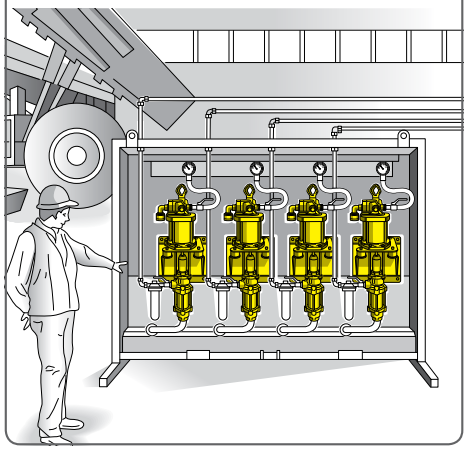
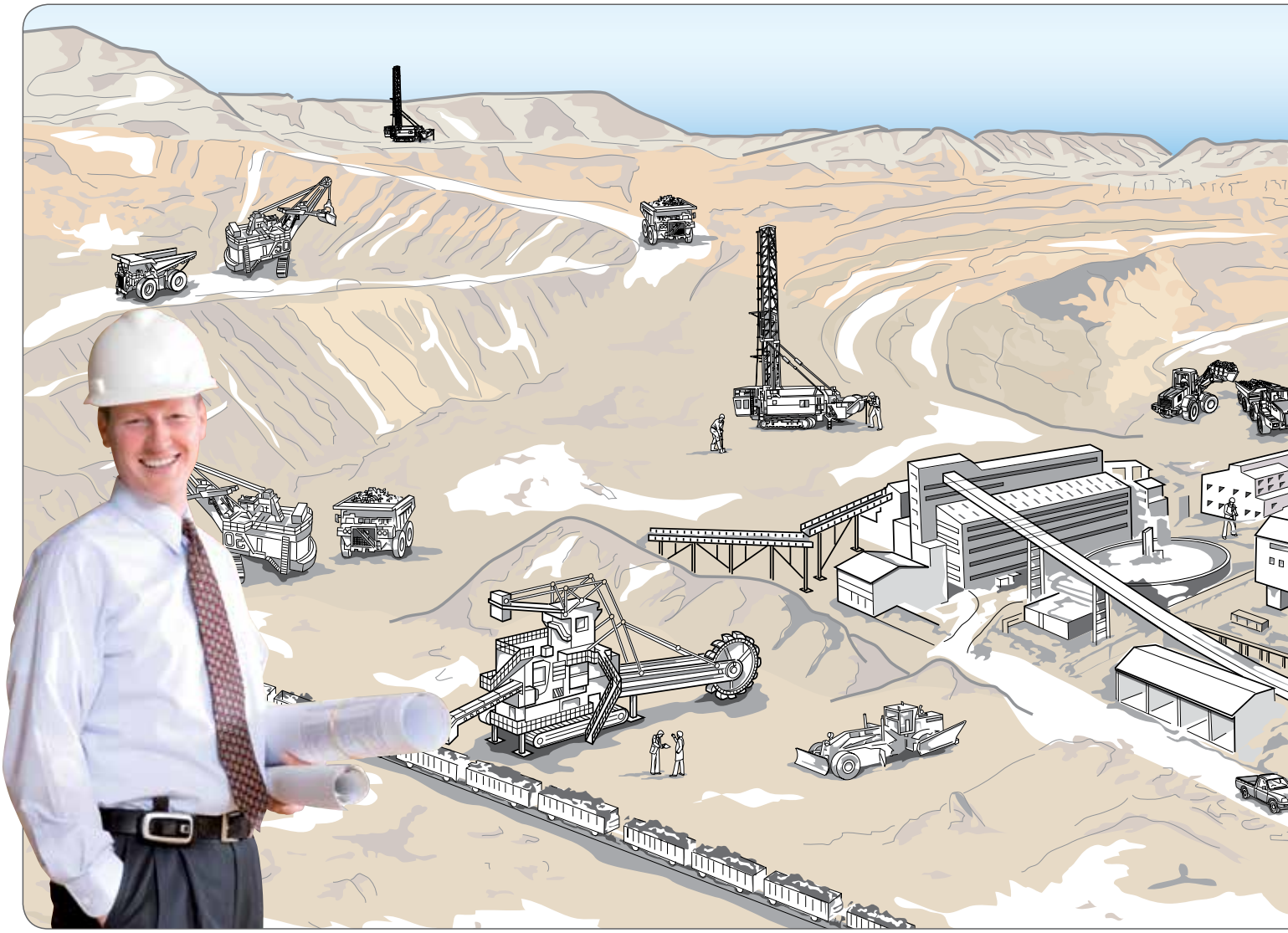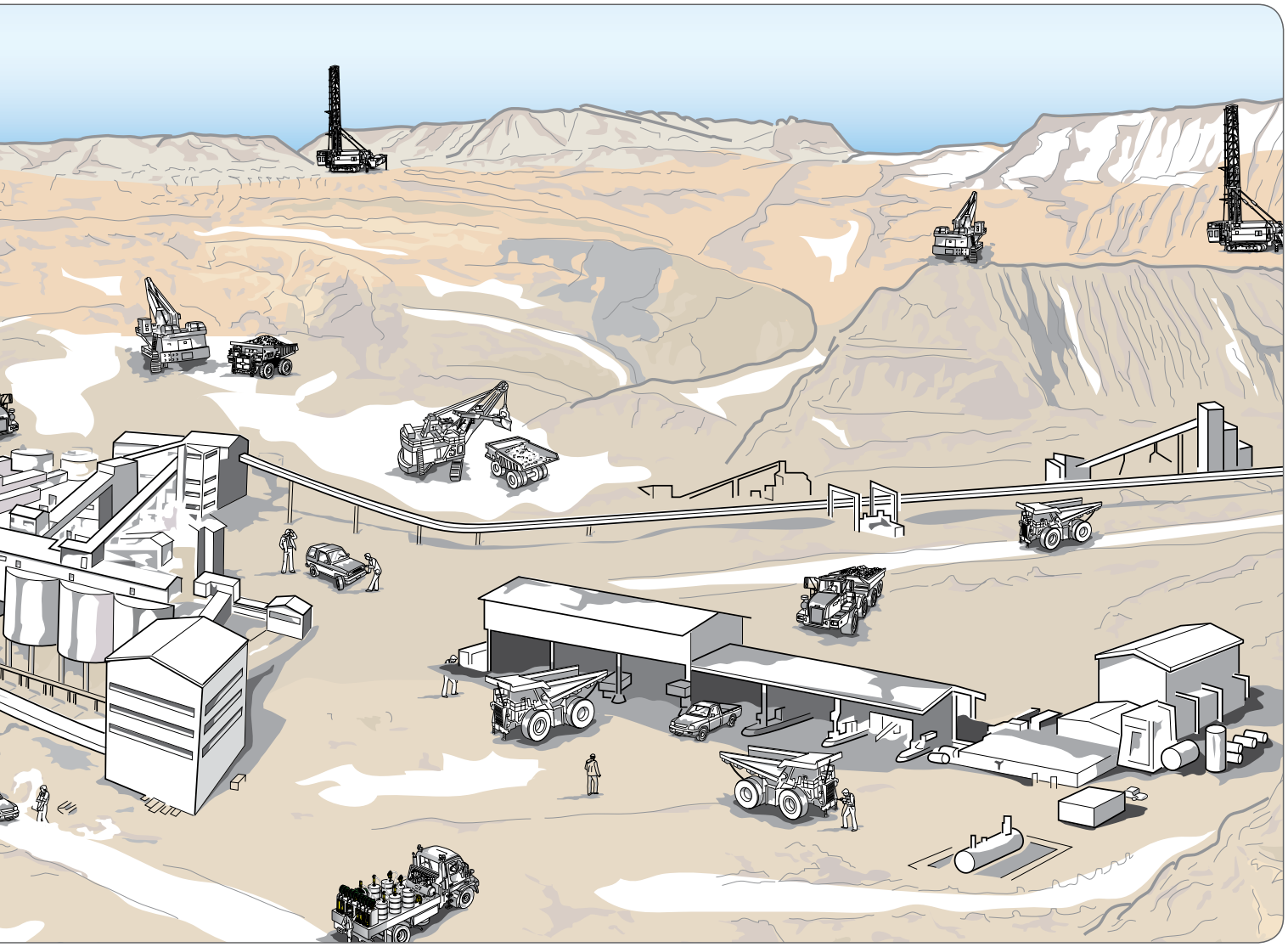
...everything for mining
technology, quality, functionality