TROLLEY-MOUNTED HOSE REELS

N° 222-AC

Work safely,
move with ease

ADVANCED FLUID
MANAGEMENT SOLUTIONS

HELP THE NATURE

Packaging contains, depending on the articles, one or more of the following materials; they must be recycled in accordance with current regulations in the country of use.

cardboard • polyethylene sack • polystyrene
paper • wood • nails • plastic strap
cellophane • clips • gummed paper

ADVANCED FLUID MANAGEMENT SOLUTIONS

DESIGN IS AN

Art

founded in 1975

the human side of Quality

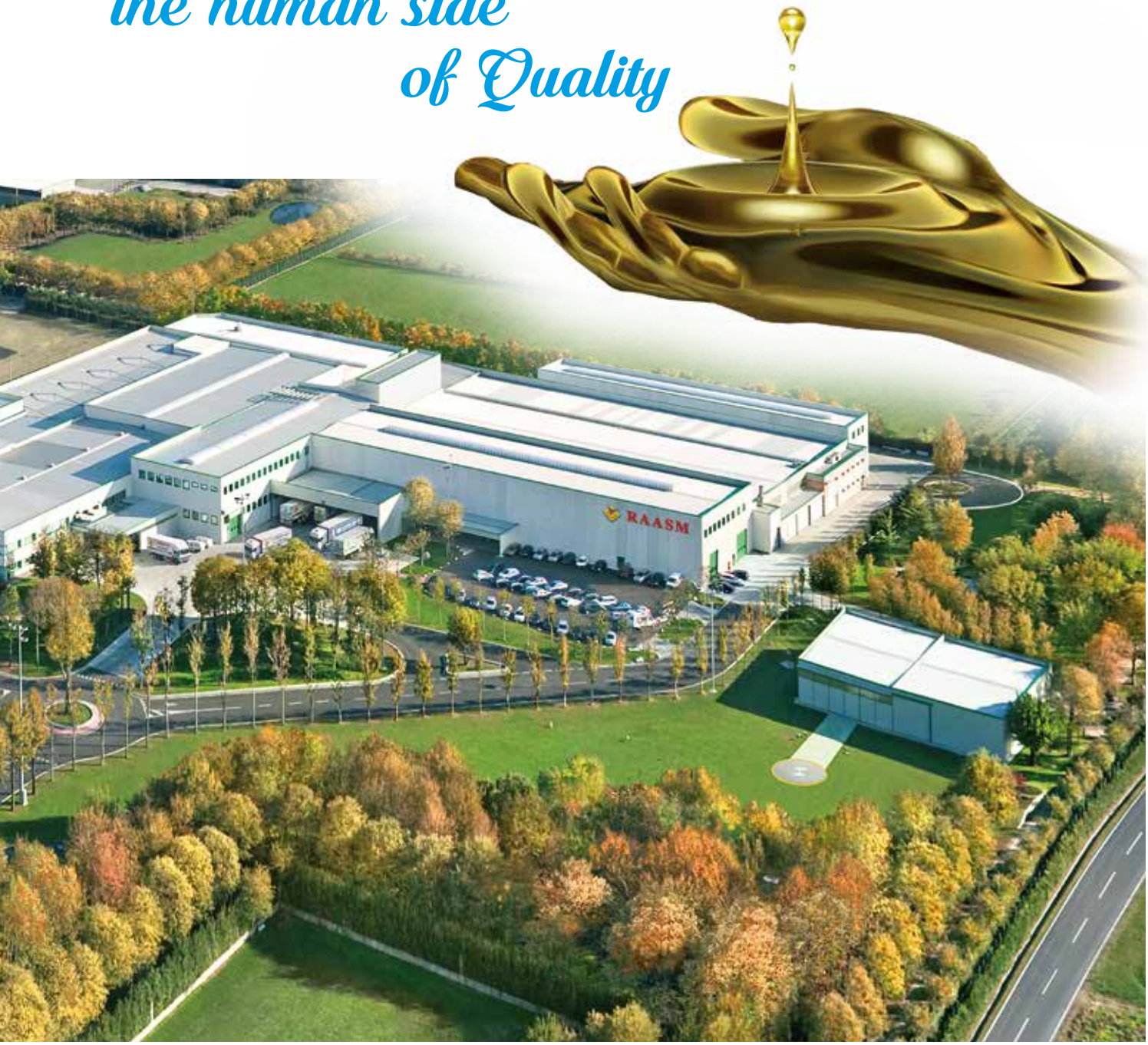

strong points

- Security system that **prevents the handle rotation** while the hose unreels, thus avoiding accidental damages to people or things.
- **Fold-in handle** as standard reduces the dimensions of the hose reel and simultaneously increases safety during use and movement.
- **Rotation lock** as standard eliminates the risk of involuntary drum rotation.
- **Trolley brake** as standard automatically locks the trolley when stationary.
- **Hose guide** as standard makes winding easy.
- **AISI 304 or AISI 316 stainless steel** version for particularly aggressive environments.
- **Max reel capacity.** The spring absence allows for the maximum utilization of the drum space.

TROLLEY USE

Stop & go

We advise activating the drum lock and folding in the handle while moving the trolley.

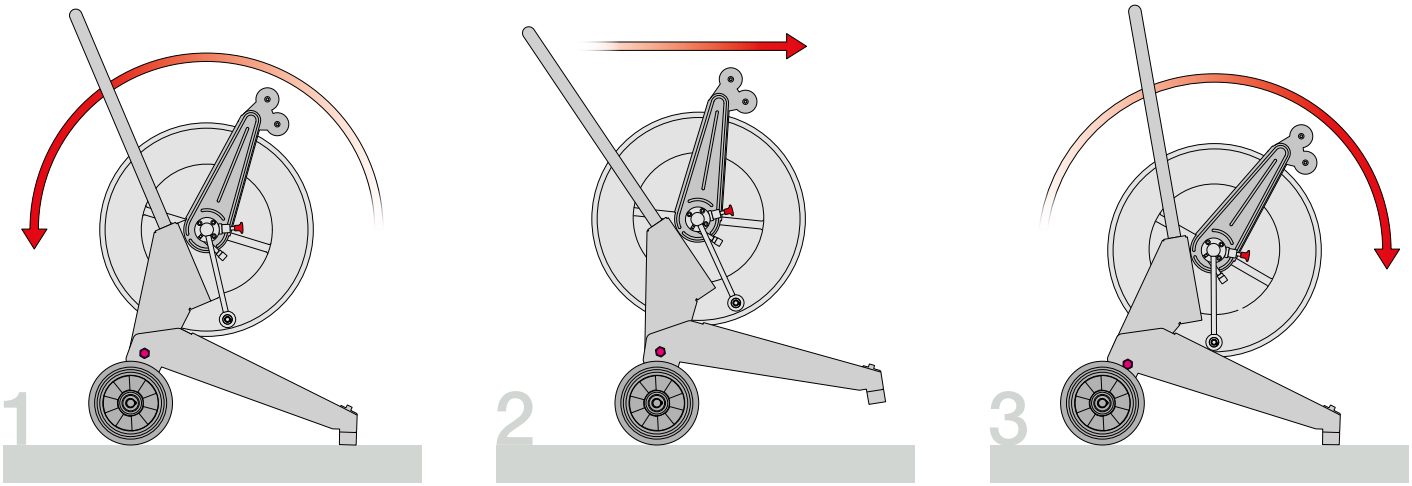

1. Tilt the handle downward: the super block system is automatically deactivated, but the trolley is still touching the ground.
2. Tilt the handle further back and move the trolley in the desired direction.
3. Slowly release the handle until the trolley is resting completely on the ground: the super block system is activated automatically.

INDEX

Technical characteristics	page	8
Series 530 painted and stainless steel	page	10
Series 540 painted and stainless steel	page	11
Series 560 painted and stainless steel	page	12

SAFETY SYSTEM
The handle rotation lock system, designed by RAASM, allows you to work without any concerns

arms with hose guide as standard make unrolling easier and more even

super BLOCK

is **the automatic trolley brakecreated** by RAASM for when the trolley is in the stationary position

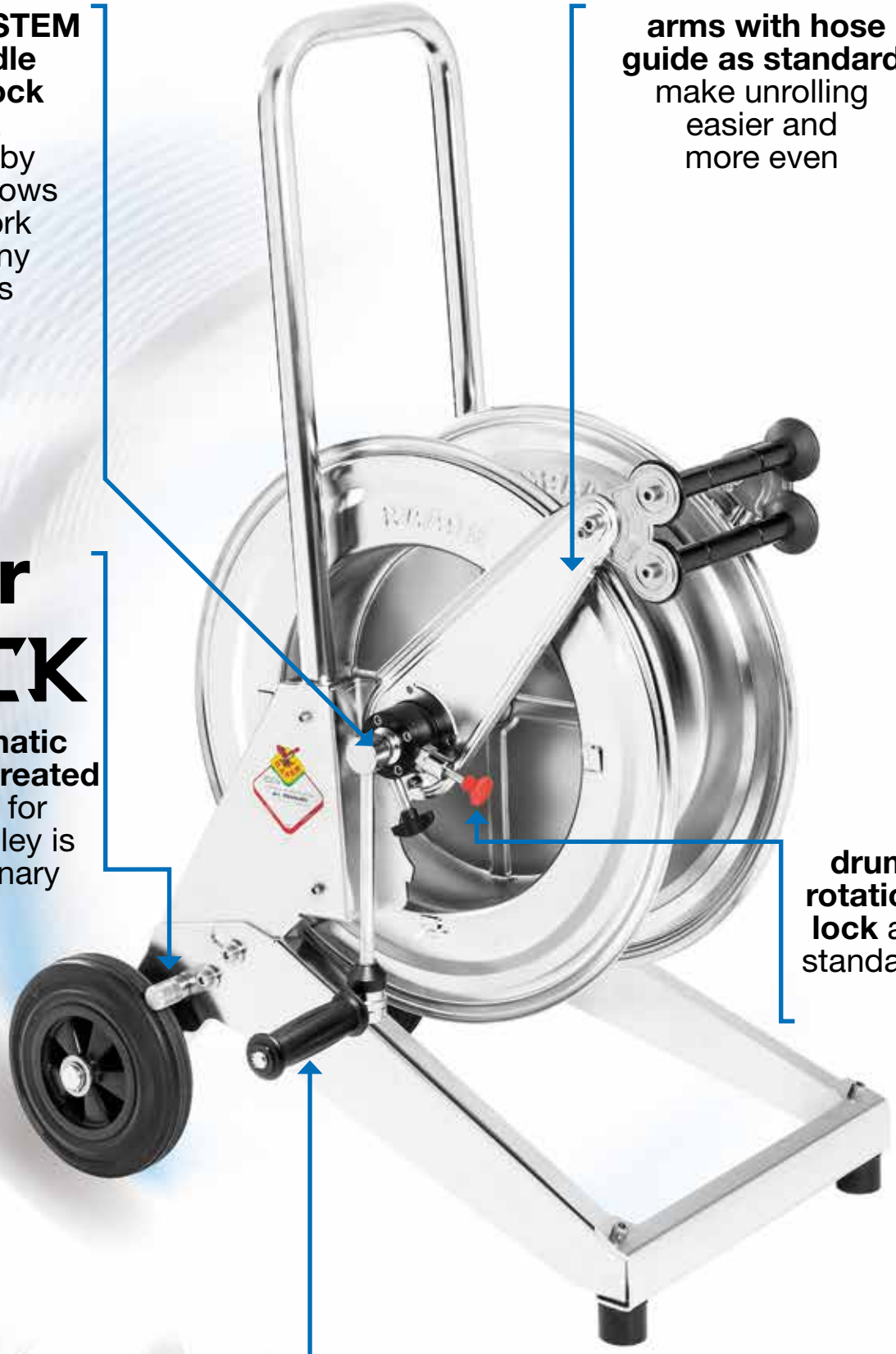

drum rotation lock as standard

fold-in **handle** as standard. Reduces dimensions and increases safety in one simple gesture.

Series 530-540-560
TECHNICAL **CHARACTERISTICS**

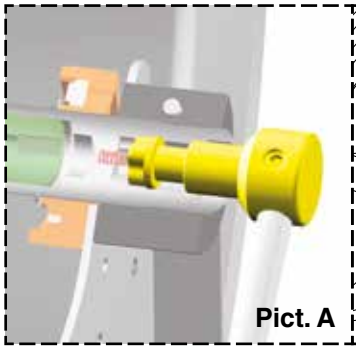
Pict. A

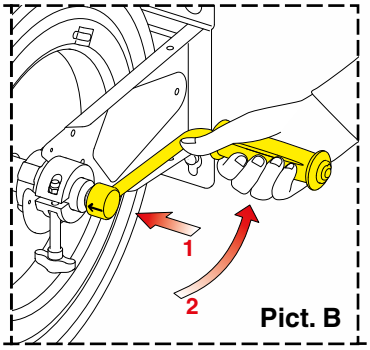

Pict. B

SECURITY SYSTEM
The hose reel is designed with a new security system that allows the handle to stay in place, avoiding the rotation during the manual hose unreeling (Picture A).

To rewind the hose, use the handle as follows (Picture B):
1 press on the knob that connects the handle to the drum
2 rotate handle counterclockwise

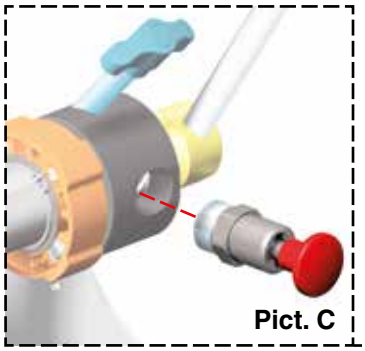
Pict. C

ROTATION LOCK (Picture C)
This special device stops any drum movement.

A **REGULATION CLUTCH**
Allows to regolate the drum rotation speed during the hose unwinding.

B **SUPER BLOCK**
Is the automatic trolley brakecreated by RAASM for when the trolley is in the stationary position.

C **"STOP & GO" TROLLEY**
Durable and user-friendly, it allows quick movement of the hose winder for operation in different work environments with the same equipment.

D **CENTRAL PIN**
Available, depending on model, in galvanized steel or in stainless steel AISI 304 or AISI 316.
Suitable to work with different kinds of fluids and with passages sized to avoid pressure losses.

E **DRUM SUPPORT BUSHINGS**
Drum support bushings in Tenaxid, self lubricating material resistant against corrosion.

F **SWIVEL JOINT**
Designed with the ideal internal dimensions to guarantee the most possible flow. It is realized, depending on the model, in brass, AISI 304 or AISI 316 stainless steel, with seals in Viton® and Teflon®.

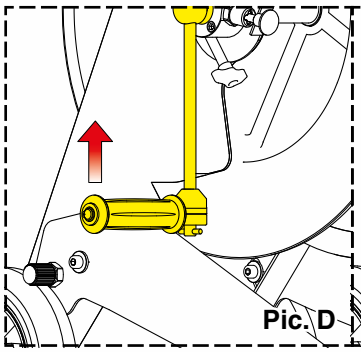
Pic. D

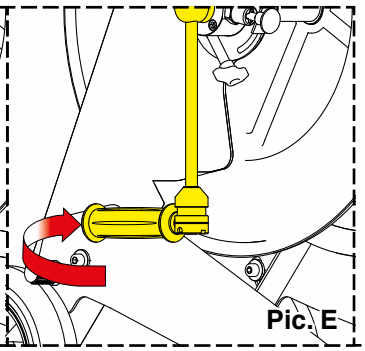
Pic. E

FOLD-IN HANDLE
The fold-in handle featured as standard on the trolley-mounted hose reels, can be used to reduce dimensions and increase safety.

Instructions for use:
Fig. D Push the handle upwards
Fig. E Rotate the handle right or left to fold it in.

To restore the handle's starting position push the handle upwards and turn it 90°.

G
DRUM
Sturdy and practical, with beads to reinforce the structure and rounded border.
Available in painted steel or AISI 304 and AISI 316 stainless steel.
H
HOSE GUIDE
This accessory is provided as standard and guides the hose for even and correct winding.
It is equipped with horizontal rollers that reduce wear of the hose.
F
E
D
A
B
C

Hose reel Series 530
Manual trolley-mounted

The dimensions of the **530 Series manual trolley-mounted hose reels** guarantee ample rewinding length while maintaining a lightweight and versatile product.

Comfortable and safe

Note: All the hose reels in the table are without hose

TROLLEY-MOUNTED	GALVANIZED STEEL	AISI 304 S. STEEL	AISI 316 S. STEEL	Connection	
DRUM	PAINTED STEEL	AISI 304 S. STEEL	AISI 316 S. STEEL	inlet	outlet
Air - Water 20 bar - **brass** swivel joint - **Viton®** seals	236530.100	246532.100	-	F 1/2" G	F 1/2" G
Water max 130° C 100 bar - **AISI 304 stainless steel** swivel joint - **Viton®** seals	236530.200	246534.200	256535.200 *	F 1/2" G	F 1/2" G
Water max 130° C 200 bar - **AISI 304 stainless steel** swivel joint - **Viton®** seals	236530.300	246534.300	256535.300 *	F 3/8" G	F 1/2" G
Water max 130° C 400 bar - **AISI 304 stainless steel** swivel joint - **Teflon®** seals	236530.350	246534.350	256535.350 *	F 3/8" G	F 1/2" G

* **AISI 316 stainless steel** swivel joint

HOSE REEL CAPACITY

Ø HOSE EXTERNAL		SERIES 530
1/4"	14 mm	Length max 60 m
3/8"	17 mm	Length max 35 m
1/2"	20 mm	Length max 25 m
5/8"	21 mm	Length max 18 m
3/4"	27 mm	Length max 15 m
1"	34 mm	Length max 7 m

The hoses to be assembled on the hose reels must be suitable for the working pressures specified on the label.

OVERALL DIMENSIONS (mm)

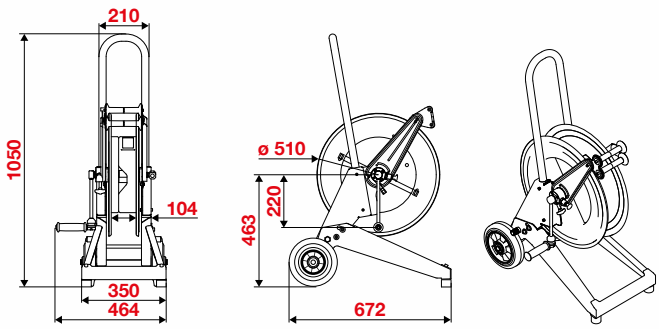

N°1 packing m³ 0,28 26 kg

Hose reel Series 540
Manual trolley-mounted

The manual hose reel Series 540 is an efficient and simple solution to the handling of flexible hoses even up to 1”.

light and more manegeable

Note: All the hose reels in the table are without hose

TROLLEY-MOUNTED	GALVANIZED STEEL	AISI 304 S. STEEL	AISI 316 S. STEEL	Connection	
DRUM	PAINTED STEEL	AISI 304 S. STEEL	AISI 316 S. STEEL	inlet	outlet
Air - Water 20 bar - **brass** swivel joint - **Viton®** seals	236540.100	246542.100	-	F 1” G	F 1” G
	236540.105	246542.105	-	F 1/2” G	F 1/2” G
Water max 130° C 100 bar - **AISI 304 stainless steel** swivel joint - **Viton®** seals	236540.200	246544.200	256545.200 *	F 1” G	F 1” G
	236540.205	246544.205	256545.205 *	F 1/2” G	F 1/2” G
Water max 130° C 200 bar - **AISI 304 stainless steel** swivel joint - **Viton®** seals	236540.300	246544.300	256545.300 *	F 3/8” G	F 1/2” G
Water max 130° C 400 bar - **AISI 304 stainless steel** swivel joint - **Teflon®** seals	236540.350	246544.350	256545.350 *	F 3/8” G	F 1/2” G

* **AISI 316 stainless steel** swivel joint

HOSE REEL CAPACITY

Ø HOSE EXTERNAL		SERIES 540
1/4”	14 mm	Length max 110 m
3/8”	17 mm	Length max 60 m
1/2”	20 mm	Length max 45 m
5/8”	21 mm	Length max 25 m
3/4”	27 mm	Length max 20 m
1”	34 mm	Length max 15 m

The hoses to be assembled on the hose reels must be suitable for the working pressures specified on the label.

OVERALL DIMENSIONS (mm)

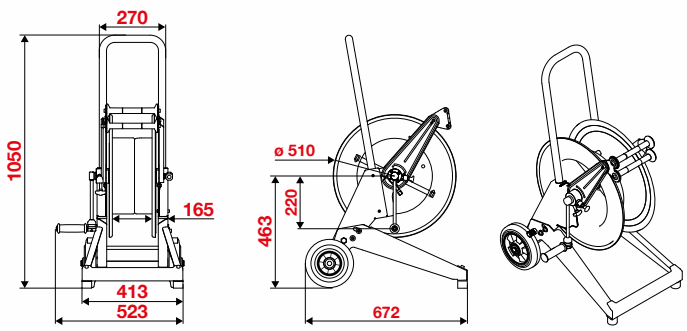

N°1 packing m³ 0,28 29 kg

Hose reel Series 560
Manual trolley-mounted

Amongst the manual trolley-mounted hose reels types, **the Series 560 is the most spacious.** Regardless of its strength, the simple operation is maintenance free.

Max capacity

Note: All the hose reels in the table are without hose

TROLLEY-MOUNTED	GALVANIZED STEEL	AISI 304 S. STEEL	AISI 316 S. STEEL	Connection	
DRUM	PAINTED STEEL	AISI 304 S. STEEL	AISI 316 S. STEEL	inlet	outlet
Air - Water 20 bar - **brass** swivel joint - **Viton®** seals	236560.100	246562.100	-	F 1" G	F 1" G
	236560.105	246562.105	-	F 1/2" G	F 1/2" G
Water max 130° C 100 bar - **AISI 304 stainless steel** swivel joint - **Viton®** seals	236560.200	246564.200	256565.200 *	F 1" G	F 1" G
	236560.205	246564.205	256565.205 *	F 1/2" G	F 1/2" G
Water max 130° C 200 bar - **AISI 304 stainless steel** swivel joint - **Viton®** seals	236560.300	246564.300	256565.300 *	F 3/8" G	F 1/2" G
Water max 130° C 400 bar - **AISI 304 stainless steel** swivel joint - **Teflon®** seals	236560.350	246564.350	256565.350 *	F 3/8" G	F 1/2" G

* **AISI 316 stainless steel** swivel joint

HOSE REEL CAPACITY

Ø HOSE EXTERNAL		SERIES 560
1/4"	14 mm	Length max 200 m
3/8"	17 mm	Length max 120 m
1/2"	20 mm	Length max 85 m
5/8"	21 mm	Length max 60 m
3/4"	27 mm	Length max 45 m
1"	34 mm	Length max 30 m

The hoses to be assembled on the hose reels must be suitable for the working pressures specified on the label.

OVERALL DIMENSIONS (mm)

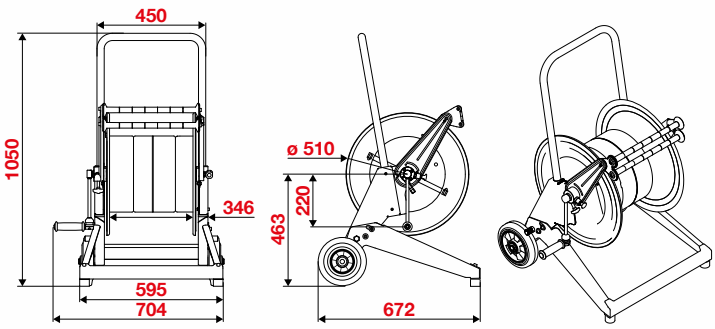

N°1 packing m³ 0,35 36 kg

ADVANCED FLUID
MANAGEMENT SOLUTIONS

APPLICATION FIELDS

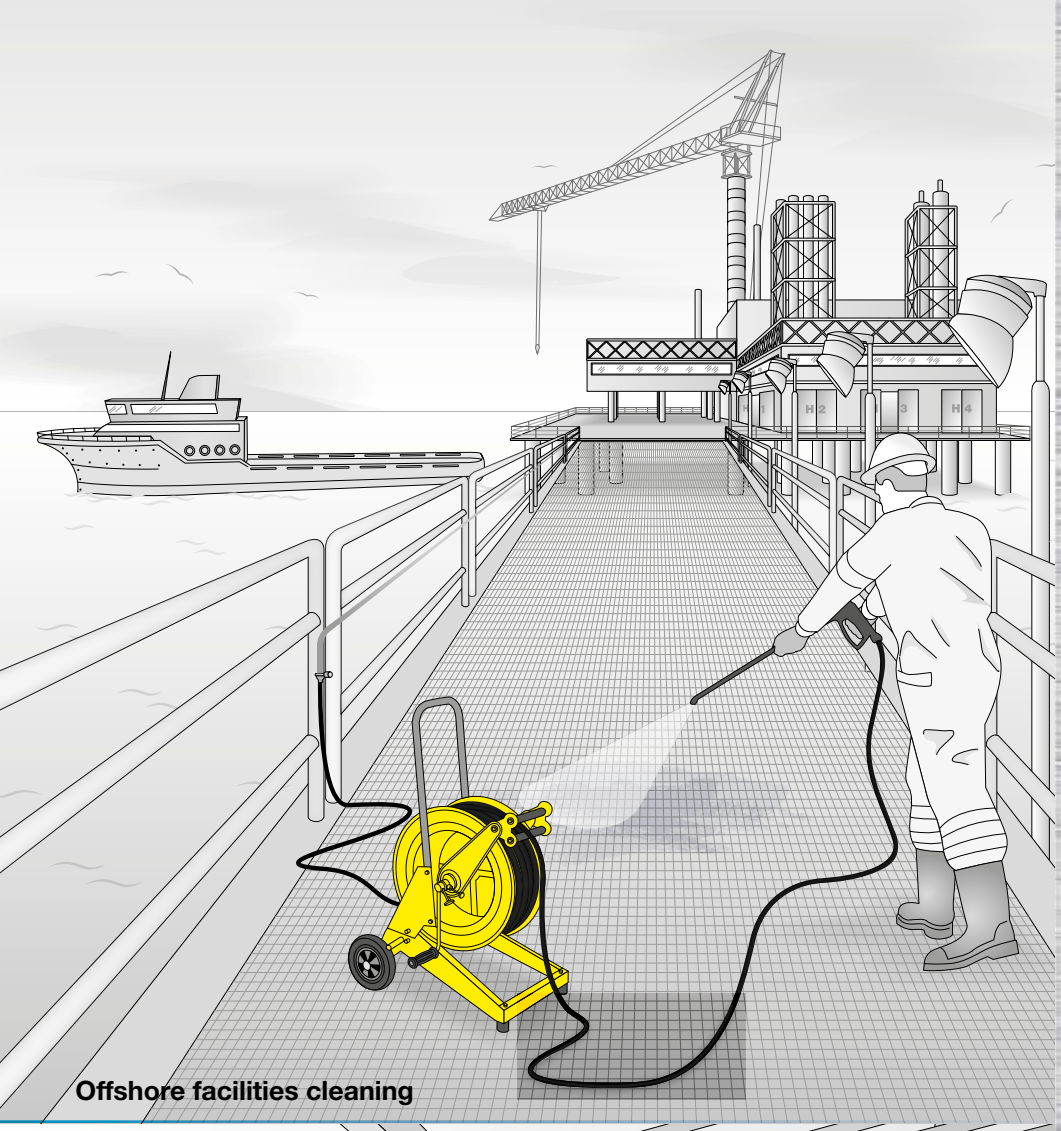

Offshore facilities cleaning

Food industries cleaning

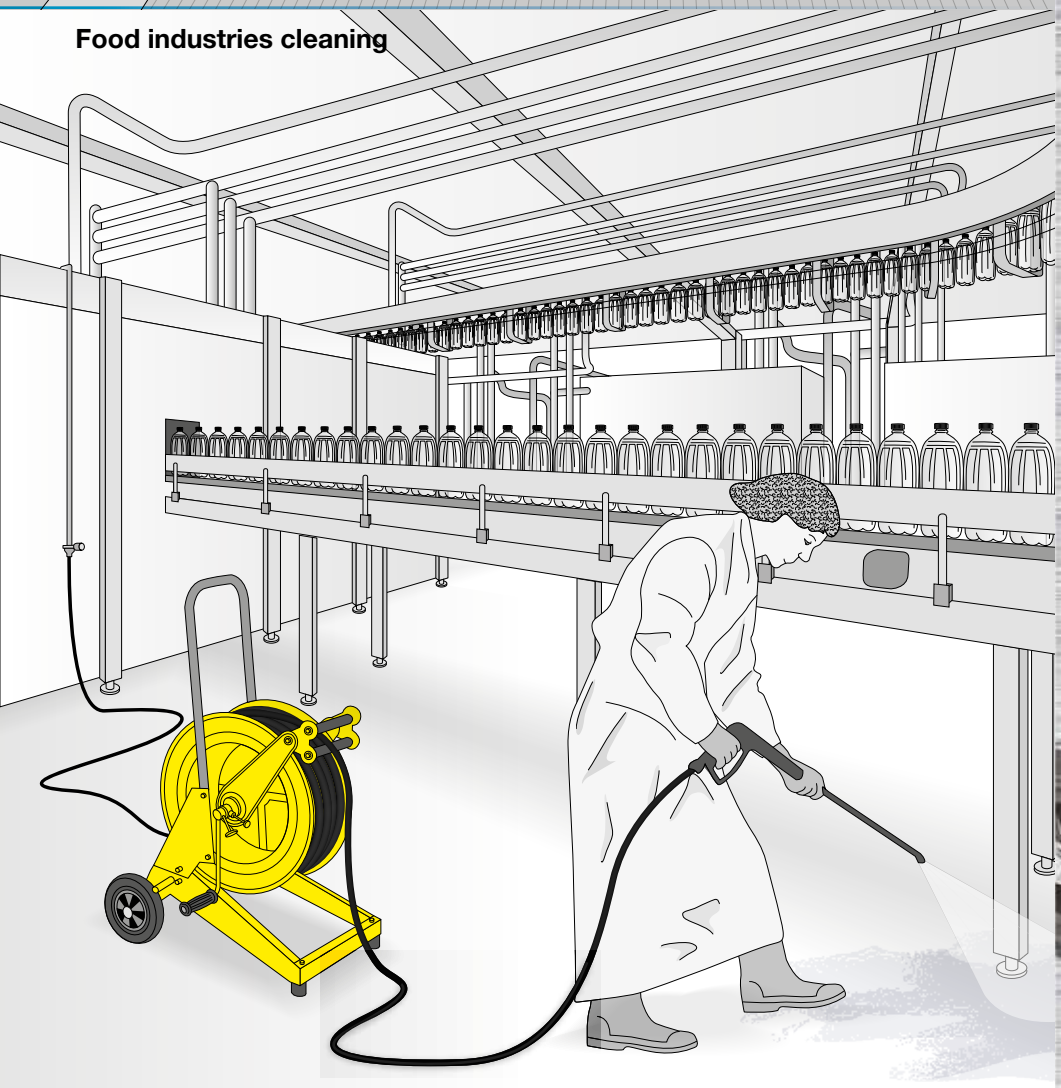

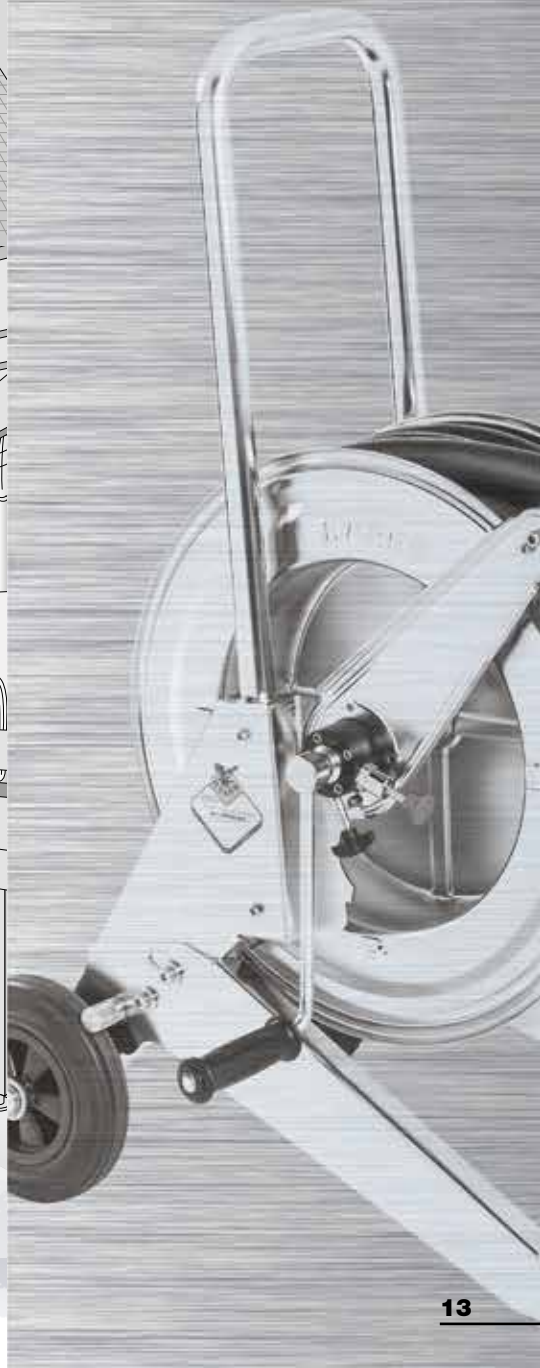

Product customisation

RAASM offers the opportunity to order 430, 530, 540 and 560 series in **4 different colours; depending on model the trolley could be in galvanized steel, AISI 304 or AISI 316 stainless steel.**
The customer **without the constraints of minimum quantity, nor additional costs, can request the colour choosing from the proposed range.**
This customization concerns only the colour and **does not include:** instruction booklets, labels, brands, etc. **Delivery times for the colour that is not standard may vary.**
Different colours, in addition to those available or other customizations, must be valued each time and will be bound to minimum quantities and additional costs.

AVAILABLE COLOURS

The products for which a customized colour is not specified, are supplied with standard grey colour as per catalogue

STANDARD COLOUR	AVAILABLE COLOURS		
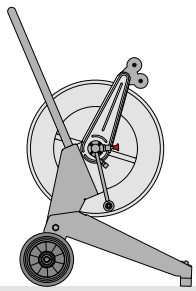	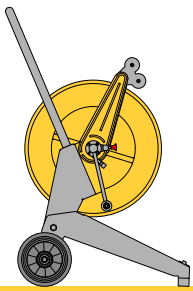	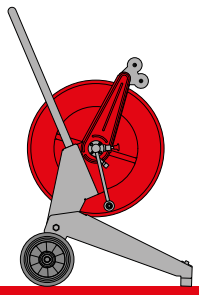	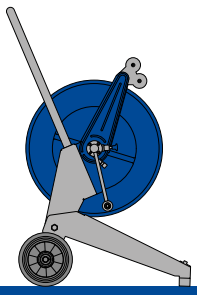
RAL 7035	RAL 1004	RAL 3020	RAL 5002

To order an item with a **different colour from the standard,** it is necessary to add the suffix:
/**C2** for yellow colour **Ral 1004**
/**C4** for red colour **Ral 3020**
/**C5** for blue colour **Ral 5002**

RAASM products
are present worldwide through a network of
qualified dealers.

www.raasm.com

THREE WORDS TO DESCRIBE RAASM

Technology

The starting point for the entire production cycle is the research and development of cutting-edge new solutions which lead to the development of **high quality products, fully produced in Italy.**

Quality

The quality of our product manufacturing has always been our absolute priority. To reach this goal rigorous testing accompanies every phase of the manufacturing process.

Functionality

RAASM offers the most complete range of lubrication products suited to many sectors.
Our aim is to always be available to provide solutions to our customers.

RAASM S.p.A.
36022 S. ZENO DI CASSOLA (VI)
Via Marangoni, 33 - ITALY

Export department
Tel. +39 0424 571130 - Fax 0424 571135
Technical department
Tel. +39 0424 571150 - Fax 0424 571155

info@raasm.com
www.raasm.com

GB

WRCAVVCAR2016-GB

Authorized distributor

All rights reserved to Raasm S.p.A.